BENUTZERHANDBUCH · SUNGROW

Sungrow PowerStack ST255CS-2H

Benutzerhandbuch für den flüssigkeitsgekühlten Batteriespeicher mit 257 kWh

Englisch | Version 11 (12/2025) | 106 Seiten Original | Hersteller: Sungrow

Was ist das für ein Dokument?

Das Benutzerhandbuch des Herstellers beschreibt Transport, Aufstellung, elektrischen Anschluss, Inbetriebnahme und Abschaltung sowie Brandschutz, Störungsbehebung und Wartung. Es richtet sich an Anlagenbetreiber und qualifizierte Elektrofachkräfte.

Das finden Sie darin

- Sicherheitshinweise, Personalanforderungen und Umgang mit der Batterie
- Produktbeschreibung: Aufbau, Batteriemodule, Stromrichter, optionales EMS300CP
- Transport, Lagerung und mechanische Aufstellung im Gebäude oder im Freien
- Elektrischer Anschluss, Batterieanschluss sowie Ein- und Ausschalten
- Brandschutz, Störungsbehebung, Wartung und Kühlmittelwechsel

> Originaldokument von Sungrow. Die folgenden Seiten sind unverändert; Eulektro stellt sie zur Produktinformation bereit. Maßgeblich sind die Angaben des Herstellers.



EULEKTRO

SUNGROW
Clean power for all

User Manual

Energy Storage System

PowerStack-ST255CS-2H



ST255CS-2H-UEN-Ver11-202512

All Rights Reserved

All Rights Reserved

No part of this document can be reproduced in any form or by any means without the prior written permission of Sungrow Power Supply Co., Ltd (hereinafter "SUNGROW").

Trademarks

SUNGROW and other SUNGROW trademarks used in this manual are owned by SUNGROW.

All other trademarks or registered trademarks mentioned in this manual are owned by their respective owners.

Software Licenses

- It is prohibited to use data contained in firmware or software developed by SUNGROW, in part or in full, for commercial purposes by any means.
- It is prohibited to perform reverse engineering, cracking, or any other operations that compromise the original program design of the software developed by SUNGROW.

About This Manual

This manual gives an introduction to the transport and storage, mounting, electrical connection, powering on/off, troubleshooting, and maintenance of the Energy Storage System ("ESS").

Target Group

This manual is intended for operators of the energy storage plant and qualified technical persons. The installation and operation must be performed only by qualified technical persons, who must:

- Have received professional training
- Have read through this manual carefully and have a good understanding of the relevant safety instructions
- Be familiar with applicable local standards and the relevant safety code for electrical system

How to Use This Manual

Read the manual and other related documents before performing any operation on the product. Documents must be properly kept and be available at all times.

To increase customer satisfaction, the product and its manual will be updated and improved constantly. If the manual you have received is slightly inconsistent with the real product, it is probably owed to a product update. In such a case, the real product should take precedence. You can find the latest manual at **support.sungrowpower.com**, or reach your sales for the manual.

The figures in this manual are for reference only. The real product may differ.

Symbols in the Manual

To ensure the safety of life and property for users when using the product and to improve the efficiency of product use, the manual provides relevant safety information, which are highlighted by the following symbols.

Symbols that may appear in this manual are listed below. Please read carefully for better use of this manual.

⚠ DANGER

Indicates an imminently hazardous situation which, if not avoided, will result in death or serious injury.

⚠ WARNING

Indicates a moderately hazardous situation which, if not avoided, will result in death or serious injury.

⚠ CAUTION

Indicates a slightly hazardous situation which, if not avoided, may result in minor or moderate injury.

NOTICE

Indicates a potential hazard which, if not avoided, will result in device malfunction or property damage.

Indicates supplementary information, emphasis on specific points, or tips related to the use of the product that might help to solve your problems or save your time.

Signs on the Product

Observe the safety signs on the product at all times, which include:

Sign	Explanation
	Hot surface! Do not touch. Otherwise, it may cause personal injuries.
	Disconnect the equipment from all the external power sources before maintenance!
	High voltages inside! Touching it may result in an electric shock.
	Danger of death due to high voltages! After the equipment is disconnected from the external power source, wait at least 5 minutes before touching any of its internal conductive parts.
	Beware of heavy weights! Lifting the heavy object directly may cause back injury. Please lift it with the assistance of proper tools.
	Beware of explosion.
	Beware of corrosion.
	Do not dispose of it together with household waste.
	No fires.

Sign	Explanation
	A medical facility should be set up nearby.
	If it gets in your eyes, flush your eyes immediately with running water or saline, and seek medical advice in time.
	Protective earthing (PE) terminal. This terminal should be connected for reliable grounding, to ensure the safety of the operator.
	Read the instructions before performing any operation on the product.
	Wear safety goggles.

Related Manuals

Related manuals and acquisition methods for this product are shown in the table below.

Link	QR code
LC300 User Manual	

Contents

All Rights Reserved.....I
About This Manual.....II
1 Safety Precautions.....1
1.1 Personnel Requirements.....1
1.2 Electrical Safety.....1
1.3 Battery Safety.....2
1.4 Hoisting and Transportation.....3
1.5 Installation and Wiring.....3
1.6 Operation and Maintenance.....4
1.7 Product Disposal.....5
2 Product Description.....6
2.1 Product Overview.....6
2.2 External Design.....7
2.2.1 ESS External Design.....7
2.2.2 Mechanical Data.....9
2.2.3 Ventilation Design.....10
2.3 Internal Design.....11
2.3.1 Internal Components.....11
2.3.2 DC/AC Power Converter Unit (SC125CX).....12
2.3.3 BSP.....15
2.3.4 Battery.....16
2.4 EMS (Optional).....19
3 Transport and Storage.....22
3.1 Precautions.....22
3.2 Transport Methods.....22
3.3 Transport Requirements.....22
3.4 Storage Requirements.....23
4 Mechanical Installation.....26
4.1 Inspection Before Installation.....26
4.1.1 Deliverables Inspection.....26
4.1.2 Equipment Inspection.....26
4.2 Installation Environment Requirements.....27
4.2.1 Installation Site Requirement.....27
4.2.2 Foundation Requirements.....27

4.2.3 Installation Space Requirements..... 29
4.3 Handling with Forklift..... 34
4.4 Hoisting and Transport.....35
4.4.1 Safety Precautions.....35
4.4.2 Hoisting Operation..... 37
4.4.3 Hoisting Procedure.....37
4.5 Securing ESS..... 38
4.6 Removing Films.....40
5 Electrical Connection.....41
5.1 Precautions.....41
5.2 Electrical Connection Overview.....41
5.3 Preparation Before Wiring..... 43
5.3.1 Preparing Installation Tools.....43
5.3.2 Opening Cabinet Door..... 44
5.3.3 Prepare Cables..... 44
5.3.4 Cable Connection.....47
5.3.4.1 Main Power Supply Wiring..... 47
5.3.4.2 Auxiliary Power Supply Wiring.....49
5.3.5 Cable Inlet Design.....50
5.4 Ground Connection.....51
5.5 AC Connection.....53
5.5.1 Safety Precautions.....53
5.5.2 AC Output Wiring..... 53
5.6 Auxiliary Power Supply Wiring.....54
5.7 Communication Wiring.....55
5.7.1 Ethernet Communication Wiring..... 55
5.7.2 EMS/LC Communication Wiring.....57
5.8 Post-wiring Operations..... 59
6 Battery Connection.....61
6.1 Precautions.....61
6.2 Cable Connection.....62
7 Powering up and Shutdown.....66
7.1 Powering up.....66
7.1.1 Inspection Before Powering up..... 66
7.1.2 Power-on Procedure..... 66
7.2 Shutdown.....67
7.2.1 Planned Shutdown.....67
7.2.2 Emergency Shutdown.....68
8 Fire Suppression..... 69

8.1 General Rules....69
8.2 Fire Suppression System....69
8.3 Detection and Alarm System....70
8.4 Fire Extinguishing System....71
8.5 Backup Protection System (Optional)....72
9 Troubleshooting....74
10 Routine Maintenance....75
10.1 Precautions Before Maintenance....75
10.2 Container Maintenance....75
10.2.1 Appearance Repair....75
10.2.1.1 Detergent Cleaning....76
10.2.1.2 Finish Paint Repair....77
10.2.1.3 Double-Layer Paint Repair....79
10.2.2 Checking Door Locks and Hinges....82
10.2.3 Checking Sealing Strips....82
10.3 Battery Use Safety and Maintenance....82
10.3.1 Safety Precautions....82
10.3.2 Battery Preventive Maintenance....85
10.3.3 Battery Replacement and Maintenance....85
10.3.4 Maintenance for Long-Term Stored Batteries....86
10.4 Battery Maintenance....88
10.4.1 Maintenance Precautions....88
10.4.2 Maintenance....88
10.5 Coolant Replacement....89
10.6 Post-maintenance Inspection....92
11 Appendix....93
11.1 System Parameters....93
11.2 Abbreviations....94
11.3 Tightening Torques....96
11.4 Quality Assurance....96
11.5 Contact Information....97

1 Safety Precautions

1.1 Personnel Requirements

The hoisting, transportation, installation, wiring, operation, and maintenance of the equipment must be carried out by qualified electrical technicians in accordance with local regulations. Qualified technicians must:

- Have certain electrical wiring, electronic, and mechanical expertise, and be familiar with electrical and mechanical schematics.
- Be familiar with the composition and working principles of the equipment and its upstream and downstream equipment.
- Have received professional training in the installation and commissioning of electrical equipment.
- Be able to respond quickly and effectively to dangers or emergencies that may occur during the process of installation and commissioning.
- Be familiar with applicable local standards and specifications of the country/region where the project is located.

1.2 Electrical Safety

⚠ DANGER

- **Touching the power grid or the contact points and terminals in the devices connected to the power grid may lead to electric shock!**
- **The battery side or the power grid side may generate voltage. Always use a standard voltmeter to ensure that there is no voltage before touching.**

⚠ DANGER

- **Lethal voltages are present inside the product!**
- **Note and observe the warnings on the product.**
- **Respect all safety precautions listed in this manual and other pertinent documents.**
- **Respect the protection requirements and precautions of the lithium battery.**

⚠ DANGER

- **Electricity may still exist in the battery when the power supply of the equipment is disconnected. Wait 10 minutes to ensure the equipment is completely voltage-free before any operation.**

⚠ WARNING

- **All hoisting, transportation, installation, wiring, operation, and maintenance must be carried out complying with the relevant codes and regulations of the country where the project is located.**

⚠ WARNING

- **Always use the product in accordance with the requirements described in this manual. Otherwise, equipment damage may occur.**

NOTICE

To prevent misuse or accidents caused by unrelated personnel, observe the following precautions:

- **Post prominent warning signs around the product to prevent accidents caused by false switching.**
- **Place necessary warning signs or barriers near the product..**

1.3 Battery Safety

For safe use of the product, technical personnel must thoroughly review and strictly adhere to the following safety requirements. SUNGROW shall not be held liable for product malfunctions, component damage, personal injury, property loss, or other damages resulting from any of the following circumstances:

- Failure to charge the batteries as required, resulting in capacity loss or irreversible damage, due to customer action.
- Battery damage, drops, or leaks due to improper operations or operations not in compliance with the relevant instructions.
- Battery damage from overdischarge caused by not powering on the batteries promptly due to customer action.
- Battery damage from using improper equipment for charging or discharging due to customer action.
- Frequent battery overdischarge caused by improper maintenance, improper capacity expansion on-site, or batteries not being fully charged for a long time, due to customer action.
- Battery damage from incorrect operation parameter settings due to customer action.

- Direct battery damage resulting from an operating environment that does not meet the specified requirements.
- Batteries used beyond the specified scenarios without approval, including but not limited to connecting additional loads, due to customer action.
- Failure to perform maintenance properly according to the system manual due to customer action.
- Damage from continued use of batteries beyond the warranty period due to customer action.
- Damage from use of defective or deformed batteries.
- Use batteries provided by SUNGROW with other batteries, including but not limited to batteries of other brands or of different rated capacities.
- Product or property damage caused by storing or installing batteries in places with flammable or explosive materials.
- Personal injury or property damage resulting from operations performed by unqualified personnel or without appropriate personal protective equipment.
- Battery damage caused by eating, drinking, smoking, or similar activities nearby.

1.4 Hoisting and Transportation

⚠ WARNING

When walking on the top of the equipment, be sure to follow the standard procedure for working at heights.

1.5 Installation and Wiring

⚠ WARNING

In the whole process of mechanical installation, the relevant standards and requirements of the project location must be strictly observed.

⚠ WARNING

Only equipment designated by SUNGROW can be used. Failure to use equipment designated by SUNGROW may cause damage to the protection function and injury to personnel.

1.6 Operation and Maintenance

⚠ WARNING

- **Wear personal protective equipment (PPE) when performing equipment maintenance or servicing.**
- **Maintenance personnel must wear PPE properly, including goggles, helmets, insulated shoes, and gloves.**

⚠ WARNING

- **There are no user-maintainable parts inside the battery unit.**
- **Only personnel authorized by SUNGROW may remove, replace, or dispose of batteries. Users are prohibited from performing battery maintenance.**

⚠ WARNING

- **To prevent electric shock, do not perform any maintenance operations beyond those covered in this manual.**
- **To protect the components secured on the doors (e.g., EMS and LC) from short circuits caused by rainwater, avoid opening the doors for operation and maintenance on rainy days.**
- **If maintenance services are required, contact SUNGROW Customer Service.**

⚠ WARNING

- **Replacement of internal components must be performed exclusively by qualified personnel to ensure continuous fire protection.**

⚠ DANGER

- **Dismantling or incinerating the battery may result in fire.**

NOTICE

- **Do not spray paint any internal or external component of the equipment.**
- **Do not use cleaning agents to clean the equipment or expose the equipment to harsh chemicals.**

⚠ WARNING

- **When replacing coolant (ethylene glycol solution) or performing maintenance on liquid cooling pipes, wear protective equipment such as goggles.**

1.7 Product Disposal

When the equipment or its internal components reach end-of-life, do not dispose of it together with household wastes. Some components inside the equipment can be recycled, while some may pollute the environment.

Contact an authorized local facility for collection.

2 Product Description

2.1 Product Overview

Product Model

The product model designation is defined as follows.

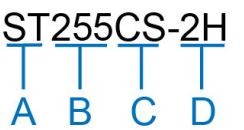

No.	Definition
A	Energy storage product
B	Battery capacity
C	Intended for commercial & industrial applications
D	Designed operating duration of the system (in hours)

Typical Application

The energy storage system (hereinafter referred to as the "ESS") integrates the electrical equipment, communication device, temperature control system, and fire suppression system into a single cabinet. For electrical equipment, the LFP battery system features liquid cooling, while the DC/AC power converter unit adopts forced air cooling for heat dissipation; these two components are integrated into the ESS through an all-in-one design. For communication devices, the LC incorporates the functions of BSC, and the CMU is built into the DC/AC power converter unit. The integrated design makes the entire system more compact in structure and easy to maintain.

With an all-in-one design, the ESS allows flexible configuration and easy installation, operation, and maintenance, with only a small space required. It also supports ancillary services such as demand control, gaining revenue from peak-to-trough price spread (peak-valley arbitrage), demand response, and virtual plant.

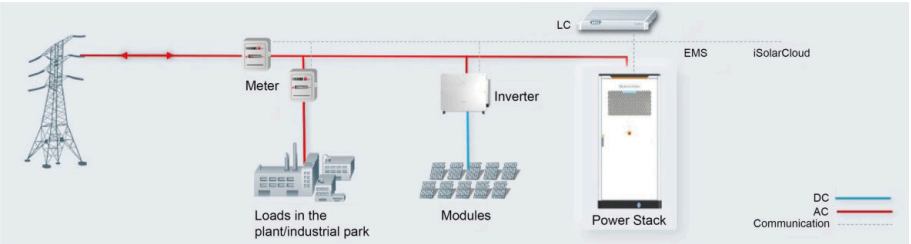

Figure 2-1 Typical Application of the ESS

*The figure is for reference only. The actual product may differ.

Grid Types

The ESS supports grid types of TN-S, TN-C, TN-C-S, TT, and IT.

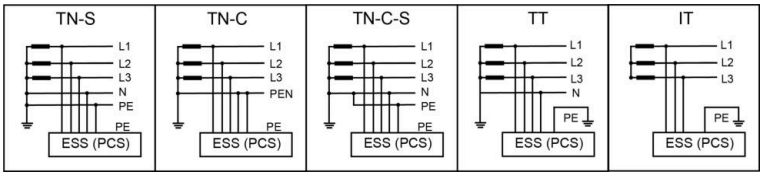

Figure 2-2 Grid Types

NOTICE

The TT grid system supports pure grid-connected scenarios only.

2.2 External Design

2.2.1 ESS External Design

The external design of the ESS is shown in the figure below.

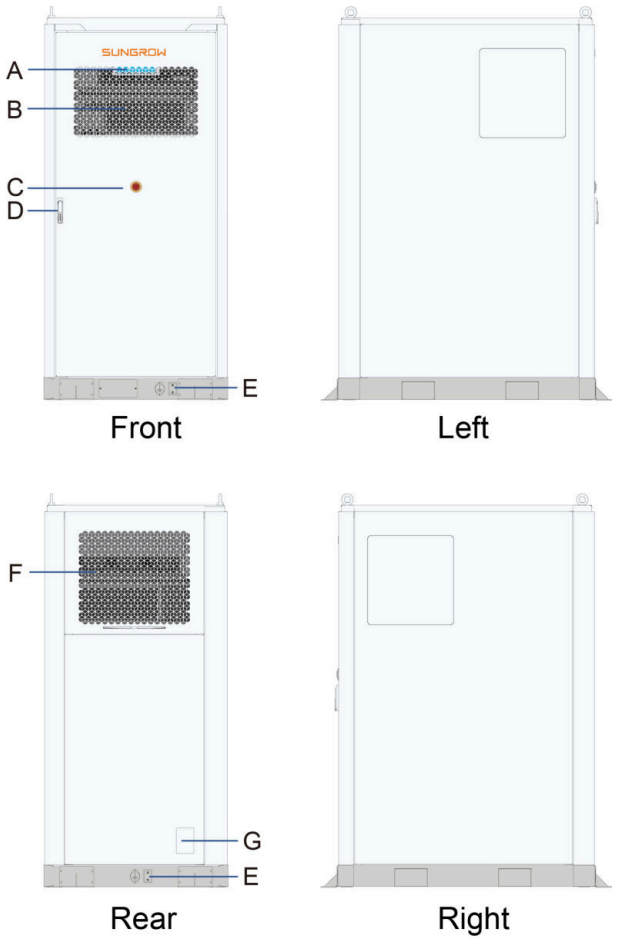

Figure 2-3 ESS External Design

*The figure is for reference only. The actual product may differ.

No.	Name
A	Indicator light
B	Air inlet
C	Emergency stop button
D	Door lock
E	Grounding point
F	Air outlet
G	Nameplate

NOTICE

The nameplate contains critical parameter information related to the ESS and must be protected against damage during transport, installation, maintenance, overhaul, and other operations. Do not damage or remove the nameplate!

Indicator Light

The indicator light is located at the top of the ESS. The description of the indicator light status is shown as follows.

Table 2-1 Indicator Light Status

Indicator Status		Description
	Steady on	The system is operating properly (charging/discharging)
	Blink with fading effect at 2-second intervals (Breathing) 	The system is normal and currently not charging or discharging
	Steady on	There is a fault in the system (the auxiliary power supply is not disconnected)
	Off	The auxiliary power supply is disconnected

Emergency Stop Button

In case of an emergency, press the emergency stop button. The system will then stop operating immediately.

⚠ DANGER

After the emergency stop button is pressed, the system will shut down and the DC contactor and main AC circuit breaker will open. However, the internal auxiliary power supply and the PCB board will still carry voltage. Do not touch them!

2.2.2 Mechanical Data

Overall Dimensions

The dimensions of the ESS are shown in the figure below.

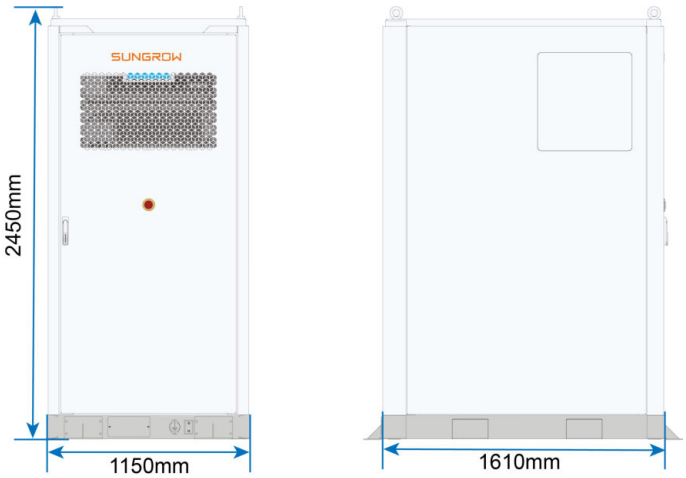

Figure 2-4 Overall Dimensions

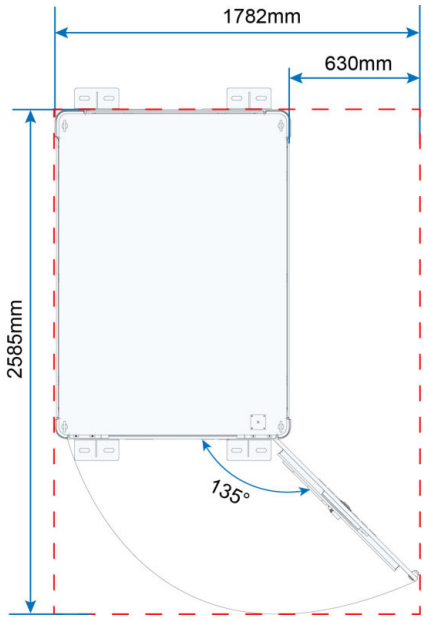

Figure 2-5 Dimensions of ESS with its Door Fully Open

*The figure is for reference only. The actual product may differ.

2.2.3 Ventilation Design

The ESS features an air inlet at the front and an air outlet at the rear, as shown below.

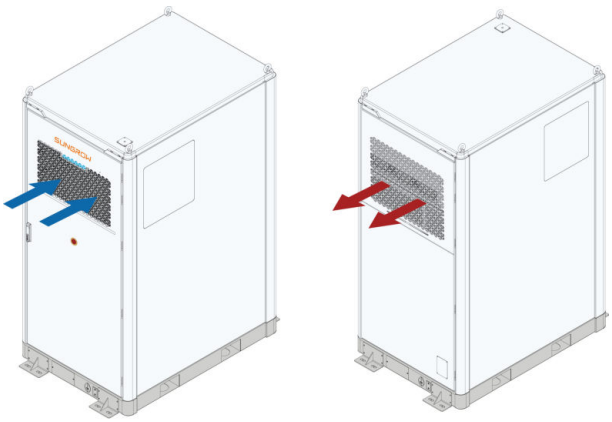

Figure 2-6 Ventilation Design

*The figure is for reference only. The actual product may differ.

2.3 Internal Design

2.3.1 Internal Components

The main electrical equipment inside the ESS is shown in the figure below.

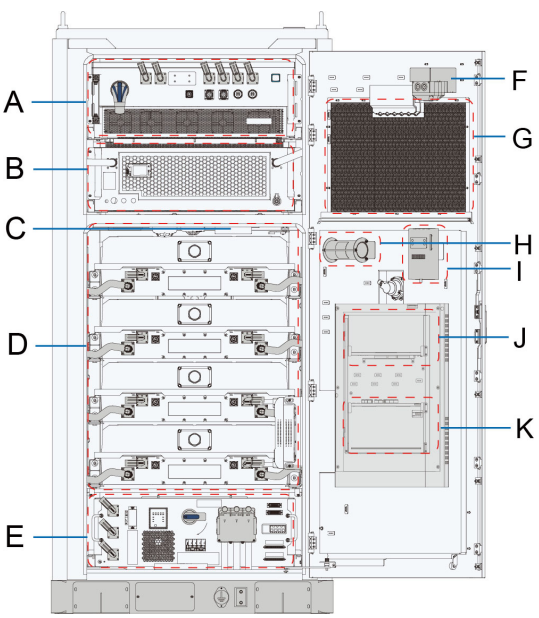

Figure 2-7 Internal Structure of the ESS

No.	Name
A	DC/AC power converter unit (SC125CX)

No.	Name
B	Liquid cooling unit
C	Detectors of fire suppression system
D	Battery RACK (compartment)
E	Battery supply panel (BSP)
F	Alarm sounder
G	Stainless steel vent mesh
H	Aerosol
I	Dehumidifier
J	LC300
K	EMS300CP (optional)

*The figure is for reference only. The actual product may differ.

2.3.2 DC/AC Power Converter Unit (SC125CX)

External Design

The external design of the SC125CX DC/AC power converter unit is shown in the figure below.

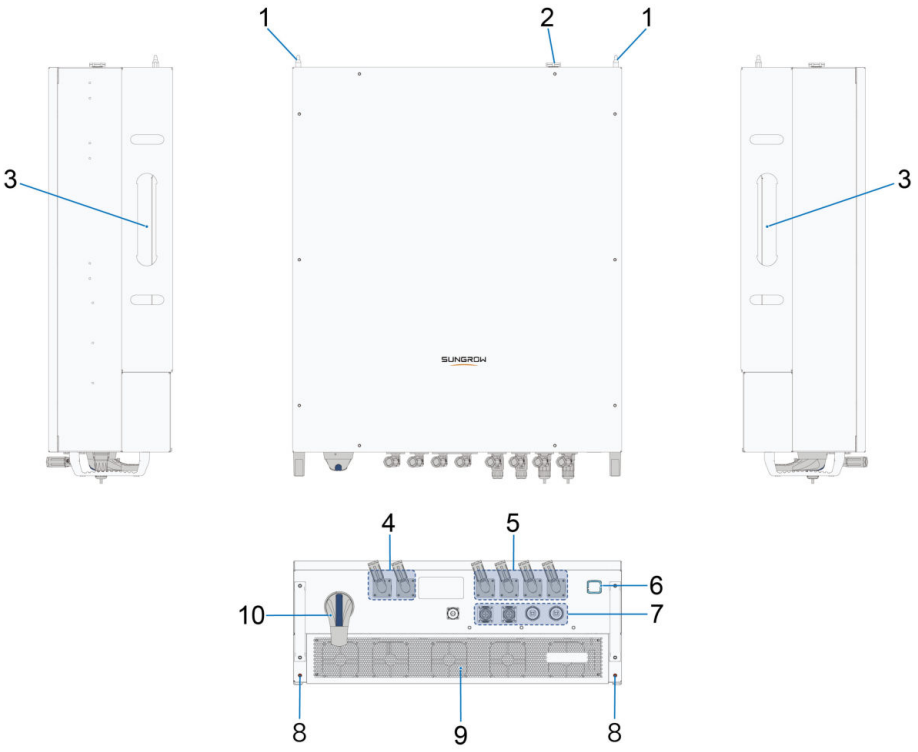

Figure 2-8 External Design

*The figure here is for reference only. The actual product may differ.

No.	Designation	Description
1	Locating pin	Used to restrict the free movement of the DC/AC power converter unit.
2	Vent valve	Resistant to dust and water; air permeable.
3	Guide rail	Used for the transport, installation, and removal of the device.
4	Ports for DC wiring	Used for DC wiring of the device.
5	Ports for AC wiring	Used for AC wiring of the device.
6	Indicator light	Indicates the current operating status.
7	Ports for communication wiring	Used for communication wiring of the device.

No.	Designation	Description
8	*Additional grounding terminal	Used for additional protective grounding, as specified in EN 50178.
9	Air inlet cover	Fans are installed at the back of the cover plate, used for forced cooling.
10	DC switch	Used to disconnect the equipment from the battery safely.

⚠ WARNING

***During product use, avoid DC positive/negative-to-ground short circuits and short circuits between the positive and negative terminals. Otherwise, it may lead to serious damage to the DC/AC power converter unit.**
In case a short circuit fault has occurred, the whole DC/AC power converter unit needs to be replaced.

Indicator Light Panel

The indicator light panel serves as an interface for human-machine interaction and is used to indicate the current operating status of the DC/AC power converter unit.

Table 2-2 Indicator Light Status

Indicator	Status	Description
 Blue	Steady on	The device is operating.
	Blink fast (Interval: 0.2 s) 	The device has connected to Bluetooth and data communication is in process. There is no fault in the device.
	Blink slow with fading effect (Interval: 2 s) 	The device has been powered on and is in the emergency stop, standby, or startup state.
 Red	Steady on	A fault has occurred (the device cannot connect to the grid).
	Blink	The device has connected to Bluetooth and data communication is in process. There is a fault in the device.
	Off	The AC and DC sides are both disconnected from power.

Indicator	Status	Description
Off		

2.3.3 BSP

External Design

The external design of the BSP is shown in the figure below.

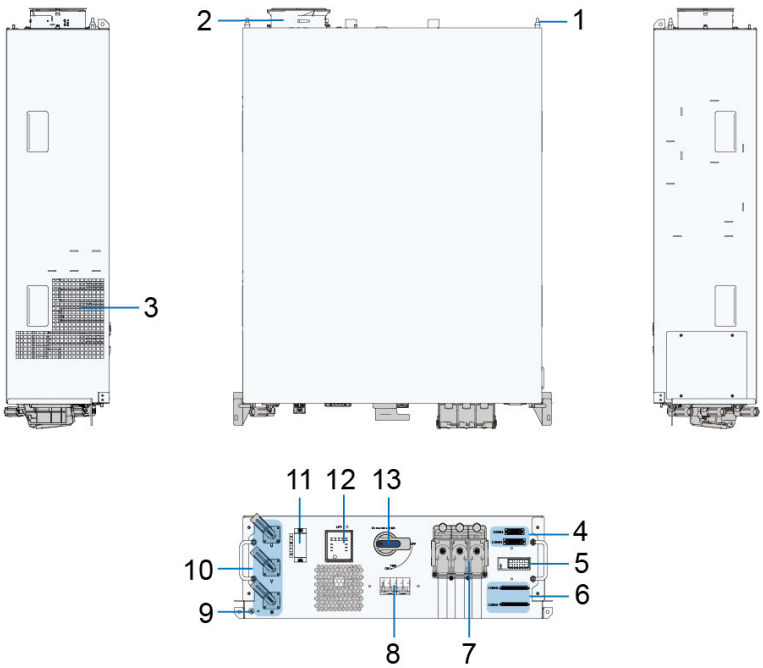

Figure 2-9 External Design

*The figure here is for reference only. The actual product may differ.

No.	Designation	Description
1	Locating pin	Used to restrict the free movement of the BSP.
2	Air outlet	Used to exhaust the circulating hot air from the BSP.
3	Air inlet	Used to bring circulating cool air into the BSP.
4	Connection ports 3–4	Used for power supply or communication wiring of the 24 Vdc device inside the cabinet.

No.	Designation	Description
5	Ethernet communication port	Used for communication wiring of the device.
6	Connection ports 1–2	Includes communication and 24 V power supply.
7	Ports for AC output wiring	Used for AC output wiring of the device.
8	Miniature circuit breaker	AC auxiliary power supply and UPS control switch.
9	Additional grounding terminal	Used for additional protective grounding, as specified by EN 50178.
10	Ports for AC input wiring	Connected to the AC side of the DC/AC power converter unit.
11	Power port for liquid cooling unit	Used for power supply wiring of the liquid cooling unit.
12	UPS	Uninterruptible power supply.
13	AC main switch	Used to disconnect the device from loads safely.

*The system is equipped with an internal auxiliary power supply as standard.

2.3.4 Battery

Cell

The exterior and technical data of the cell are shown as follows.

Table 2-3 Cell Data 1

Cell	Parameter	Value
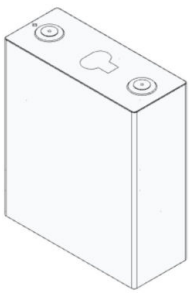	Rated capacity	314 Ah
	Rated energy	1004.8 Wh
	Rated voltage	3.2 V
	Voltage range	2.5 V – 3.65 V (cell temperature T > 0 ℃) 2.0 V – 3.65 V (cell temperature T ≤ 0 ℃)

The dimensions and weights of cells from different brands are shown below.

Table 2-4 Cell Data 2

Dimensions (Thickness * Height * Width)	Weight
(71.60 ± 0.50) mm * (207.20 ± 0.50) mm * (174.70 ± 0.80) mm (including terminal post) (71.60 ± 0.50) mm * (204.57 ± 0.80) mm * (174.70 ± 0.80) mm (not including terminal post)	(5.56 ± 0.15) kg
(71.60 ± 0.50) mm * (207.90 ± 0.80) mm * (174.30 ± 0.80) mm (including terminal post) (71.60 ± 0.50) mm * (204.60 ± 0.80) mm * (174.30 ± 0.80) mm (not including terminal post)	(5.55 ± 0.15) kg
(71.70 ± 0.50) mm * (207.20 ± 0.50) mm * (174.40 ± 0.50) mm (including terminal post) (71.70 ± 0.50) mm * (204.30 ± 0.50) mm * (174.40± 0.50) mm (not including terminal post)	(5.60 ± 0.15) kg
(71.60 ± 0.50) mm * (207.10 ± 0.80) mm * (174.20 ± 0.80) mm (including terminal post) (71.60 ± 0.50) mm * (204.40 ± 0.80) mm * (174.20 ± 0.80) mm (not including terminal post)	(5.526 ± 0.15) kg

PACK

The PACK (battery module) is mainly composed of cells connected in series and features functions including battery voltage and temperature sampling and balancing control. Designed with a chip dedicated to battery management, it receives control commands and uploads collected data through daisy chain communication.

Table 2-5 PACK Data 1

PACK	Parameter	Value
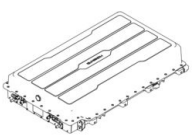	Dimensions (W * H * D) (not including wiring terminals and faucets)	(868 ± 5 mm) * (247 ± 5 mm) * (1415 ± 5 mm)
	Charge/ discharge rate	≤ 0.5P
	Cell type	Prismatic cell with aluminum shell, LFP
	Configuration (series and parallel)	1P64S

PACK	Parameter	Value
	Key components	64 cells, 1 BMU, 1 fuse (1P64S)
	Ingress protection rating	IP65

The weights of different models of PACK are shown below.

Table 2-6 PACK Data 2

PACK Model	Weight
P0643AL-AHA / P0643BL-AHA P0643AL-AA-H / P0643BL-AA-H	(410 ± 6) kg
P0643AL-AMA / P0643BL-AMA P0643AL-AA-M / P0643BL-AA-M	(413 ± 6) kg
P0643AL-ANA / P0643BL-ANA P0643AL-AA-N / P0643BL-AA-N	(413 ± 6) kg
P0643AL-AGA / P0643BL-AGA P0643AL-AA-G / P0643BL-AA-G	(408 ± 6) kg

RACK

The RACK is mainly composed of several PACKs and fuses.

Technical data of the RACK is shown in the table below.

Table 2-7 RACK Data

RACK Model	DC Output Voltage Range	Rated Power	Rated Voltage	Short-Circuit Current
R0257BL-AHAA R0257BL-AAA-H R0257BL-AMAA R0257BL-AAA-M R0257BL-ANAA R0257BL-AAA-N R0257BL_AGAA R0257BL_AAA-G	691.2 V – 934.4 V	128.6 kW	819.2 V	≤ 20 kA

RACK Structure

Table 2-8 RACK Structure

Model	Arrangement
ST255CS-2H	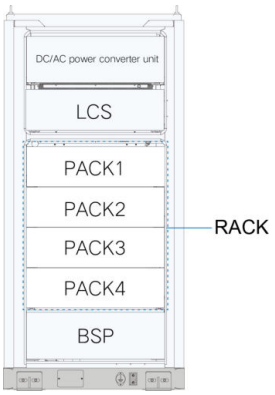

Note: PACK represents a 1P64S PACK. LCS represents liquid cooling unit and BSP represents power distribution box.

2.4 EMS (Optional)

The EMS300CP energy management system (EMS) controller can collect the operation data of the ESS and upload them to iSolarCloud so that users can monitor and control the system operation remotely.

EMS300CP is an optional feature. It is positioned on the inner side of the cabinet door for easy maintenance and management.

Auxiliary Meter

In addition to the ESS operation data, the EMS300CP also needs to collect the meter data, as required by some particular functions. Therefore, please install the following three meters before installing the ESS.

- Gateway meter: Reverse power protection, demand control.
- Overload monitoring meter: Overload protection.
- Electricity meter: Overload protection.

Monitoring via Local Web

The internal communication wiring between the EMS300CP and the ESS is completed at factory. At the site, connect the PC to the communication port on the ESS. Then, you may access the EMS300CP Web system on the PC.

The homepage of the EMS300CP Web system is shown below:

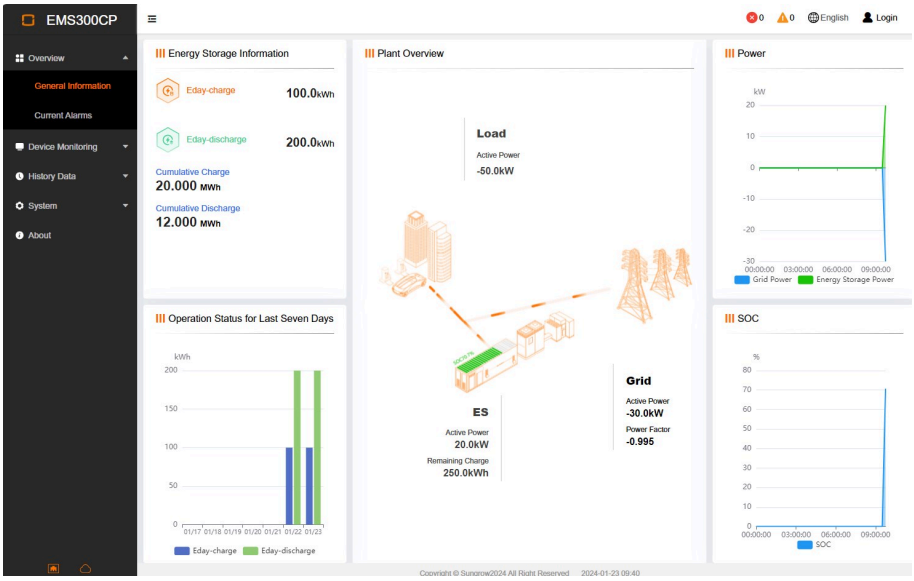

Figure 2-10 Homepage of EMS300CP Local Web

You can scan the QR code on the nameplate on the back of the ESS to get the user manual for the EMS300CP Web system, or scan the QR code:

To connect the EMS to a northbound controller, set Scheduling Mode to Third Party Scheduling (Fixed Value) on the Web of the EMS300CP.

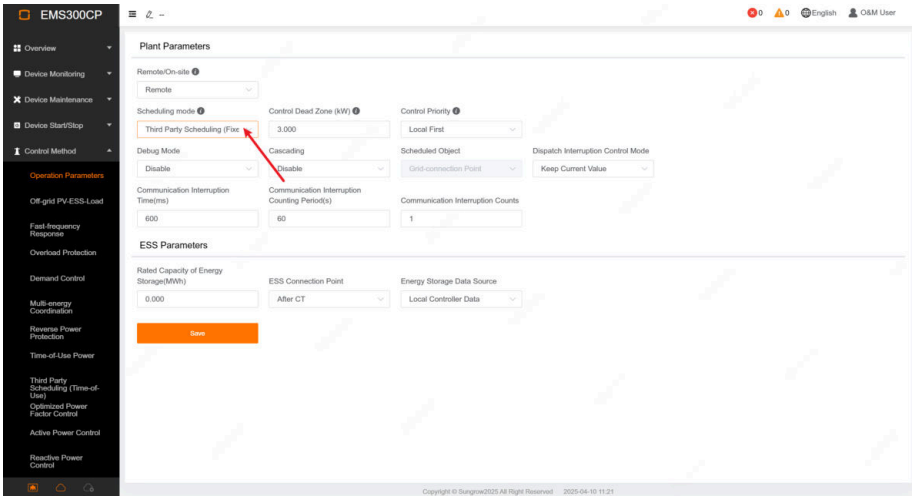

Remote Monitoring via iSolarCloud

You can also monitor the ESS remotely via iSolarCloud. You can log in to the iSolarCloud Web system on the PC, or download the iSolarCloud App from an application store on your phone:



Figure 2-11 EMS300CP Homepage in iSolarCloud (Web)

3 Transport and Storage

3.1 Precautions

⚠ CAUTION

Failure to transport and store the product in accordance with the requirements in this manual may invalidate the warranty.

3.2 Transport Methods

The ESS weighs approximately 3 tons and can be transported by land and sea. It adopts an integrated and easy-to-lift design that facilitates transport. Currently, permission has not been granted to transport the ESS by air, and no relevant guide for rail transport is available.

The ESS can be transported by truck within the country.

NOTICE

In most cases, the total weight of the truck that carries the ESS will exceed the general weight limit on the road. Therefore, you may need to acquire an overweight permit from the relevant local agency in that area.

3.3 Transport Requirements

The ESS leaves the factory with most of its internal components secured inside its body. You may lift or move the ESS as a whole directly during transport.

⚠ WARNING

In the whole process of loading, unloading, and transport, follow strictly the applicable safe operation procedure for ESS in the country/region where the project is located.

- **All the tools used on the ESS, or during operation, must have undergone proper maintenance.**
- **All personnel engaged in loading, unloading, and anchoring operations must have received relevant training, especially in safety.**
- **Do not transport the ESS when the temperature is below -30 ℃.**

During the whole process of loading, unloading, and transport, always keep in mind the mechanical parameters (overall dimensions and weight) of the ESS.

To transport and move the ESS, make sure the below requirements are met:

- All the doors of the ESS are locked.
- Select an appropriate crane or lifting tool according to the on-site conditions. The tool used must have a sufficient load capacity, boom length, and swing radius.
- It is recommended to use one crane to lift the ESS.
- Extra traction may be required to move the ESS along a slope.
- Remove all obstacles that exist or may exist along the route, such as tree branches and cables.
- Transport or move the ESS in good weather, whenever possible.
- Be sure to set up warning signs or fence off warning zones to prevent irrelevant personnel from entering the operating area, thus avoiding accidents.
- The ESS must stand upright during transport.
- Ensure the base of the ESS remains level throughout the whole transport process, with a maximum allowable tilt of 15°.
- Avoid collision or strong shock during transport.
- If the ESS is transported by land, use ropes to secure the lifting rings at the top of the ESS to the transport vehicle, to prevent it from getting overly tilted during transport.

  After the ESS arrives at the project site, remove the diagonal fixing pieces at the top four corners, and store them properly.

- Transport vehicles must comply with local traffic regulations.
- During transportation, the vehicle shall maintain a constant speed whenever possible. Sudden braking is not allowed.
- The logistics carrier shall monitor abnormal driving behavior through the logistics tracking platform or the vehicle’s on-board GPS system and issue early warnings or manual intervention alerts. If any visible damage is found during on-site unpacking, the carrier shall provide driving records as evidence for responsibility determination.

3.4 Storage Requirements

NOTICE

Store the product according to the storage requirements. Damage resulting from failure to meet the storage requirements will not be covered by the warranty

- During storage, properly archive all documentation demonstrating compliance with product storage requirements, including ambient temperature and humidity logs, photos, and inspection reports.

- The base of the ESS must be elevated off the ground to a certain height, to avoid internal condensation and also to prevent the ESS bottom from getting soaked by rain water in rainy seasons. The height shall be decided according to the on-site geological and meteorological conditions, etc.
- Store the ESS on a dry, flat, solid, and hard ground surface that is not covered by any vegetation. Requirements for the surface are as follows:
  - The surface must have sufficient load-bearing capacity to support the equipment.
  - The surface must be level, with a levelness deviation of 0–10 mm, and the slope must be less than 5°.
  - The surface must provide good drainage to prevent water accumulation or submersion of the ESS.
- Before storage, ensure that the doors of the ESS and all internal equipment are locked. During storage, avoid opening the doors, unless it is necessary.
- Maintain a clearance of 200 cm in front and 60 cm behind the ESS during storage.
- The ambient temperature range for system storage is -30°C to +50°C. Since battery degradation (SOC and SOH) is related to temperature, the optimal storage temperature is -30°C to +25°C.

  Long-term storage of the battery is not recommended as it may lead to battery capacity degradation. Even if the battery is stored at the recommended optimal storage temperature, irreversible capacity degradation will still happen during the period of rest, and such degradation will become more severe as the storage time lengthens. Please refer to the technical agreement for the specific amount of degradation.

- The UPS that is not put into operation needs to be charged every six months.
- The relative humidity for storage is 0%–95%, non-condensing.
- Use effective protections for the air inlets and outlets of the ESS. During storage, make sure the protective films on the air inlets and outlets are intact. Meanwhile, take effective measures to prevent the ingress of rainwater, dust, and sand.
- It is recommended to replace the desiccant every six months. Use montmorillonite desiccant, 200 g per bag. Place eight bags of desiccant at the collection tray area under each cabinet. Remove all desiccant from the cabinet before operation.
- Perform regular inspections at least every half a month. Check for signs of damage caused by pests or animals, and inspect the ESS and its packaging, wiring terminals, cables, and internal components for damage or aging. Promptly address any issues found or replace parts as necessary.
- Before installing an ESS that has been stored for more than six months, open its doors and perform a visual inspection. Ensure that the ESS and all internal components are intact and free of damage. Additionally, conduct inspections after powering on and startup. If necessary, request qualified personnel to test it before installation.
- Avoid storing the ESS in areas containing flammable or explosive materials. Ensure there is no fire hazard.

- Avoid storing the ESS in dusty environments with a large amount of dust, smoke, or floc. These particles may cling to the air inlets and outlets or heat sink of the equipment, thus impairing its heat dissipation performance or even getting it damaged.
- Avoid storing the ESS in places where corrosive gas or dust may be produced or accumulated, or in places within 30 km of saline-alkaline land or pollution-generating industrial complex such as chemical plants and power plants (chemical gas class: 1C1, solid particle level: 1S2).
- Do not store the ESS in environments contaminated with halogen or sulfur pollutants.
- Do not store the ESS in places with vibration or a magnetic field strength of over 30 A/m.
- When storing PACKs separately, in addition to the ESS storage requirements, observe the following:
  - Store PACKs indoors in a clean and dry place, avoiding direct sunlight or rain.
  - Keep the storage area free of hazardous gases, flammable or explosive materials, and corrosive chemicals. Avoid mechanical shock, heavy pressure, and strong magnetic fields.
  - Protect PACKs from harsh environmental conditions, such as sudden temperature changes or collisions, to avoid damage.
  - Do not tilt the packing case or turn it upside down.

If the ESS has been stored for over six months (from the date it is delivered from SUNGROW) under the required conditions mentioned above, perform charging-discharging once until the system SOC reaches 30%–40%. Make sure the SOC values are consistent after recharging.

4 Mechanical Installation

⚠ WARNING

During the whole process of mechanical installation, the relevant standards and requirements of the project site must be strictly observed.

4.1 Inspection Before Installation

4.1.1 Deliverables Inspection

Check whether deliverables are complete against the attached packing list.

4.1.2 Equipment Inspection

- Check whether the product you have received matches the order you have placed.
- Inspect the equipment and its internal components, and make sure there is no damage.
- If an EMS300CP is equipped (optional), before commissioning, ensure the gateway meter and electricity meter used in conjunction with EMS300CP are properly installed.

In case of any problem or doubt, contact your transport service provider or SUNGROW in time.

⚠ WARNING

Proceed with installation only if the ESS is intact without any signs of damage! Before installation, ensure that:

- **The ESS is in good condition, without any damage.**
- **All the components inside the ESS are intact without any signs of damage.**

NOTICE

Before installing an ESS that has been stored for more than six months, open the door and conduct a visual inspection first. Make sure the ESS and its internal components are all intact without any damage. Meanwhile, perform inspections after powering on and starting up. If necessary, ask qualified personnel to test the equipment before installation.

NOTICE

Inspect the equipment for paint damage. If damage is found, it is suggested to repair the paint to prevent rusting. For detailed instructions, see "Appearance Repair".

4.2 Installation Environment Requirements

4.2.1 Installation Site Requirement

- The climate environment and geological conditions, such as stress wave emission and underground water level, should be fully considered when selecting the installation site.
- The environment around the installation site should be dry and well ventilated.
- There should be no trees around the installation site to prevent branches or leaves blown off by heavy winds from blocking the door or air inlet of the Battery Energy Storage System Container.
- The installation site should be away from areas where toxic and harmful gases are concentrated, and free from inflammable, explosive and corrosive materials.
- It is suggested the product be installed in a place away from the residential area. Ensure the distance and noise requirements specified by the local laws and regulations are met. If the requirements cannot be met due to geographical restrictions, use noise mitigation measures. For detailed solutions, consult with the designer or SUNGROW.
- Avoid installing the Battery Energy Storage System Container in dusty environments with a large amount of dust, smoke, or floc. These particles may cling to the air inlets/outlets or heat sink of the Battery Energy Storage System Container, thus impairing its heat dissipation performance or even getting it damaged.
- Avoid installing the Battery Energy Storage System Container in places where corrosive gas or dust may be produced or accumulated, or in places within 30km (20 miles) of saline-alkaline land or pollution-generating industrial complex such as chemical plants and power plants (chemical gas class: 1C1, solid particle level: 1S2).
- Do not install the Battery Energy Storage System Container in environments contaminated with halogen or sulfur pollutants.
- There are no underground facilities at the site.

NOTICE

Do not install the device in an environment with vibration and strong electromagnetic field. Strong-magnetic-field environments refer to places where magnetic field strength measures over 30 A/m.

4.2.2 Foundation Requirements

⚠ WARNING

Considering the equipment's heavy weight, before foundation building, perform a thorough inspection on the installation site first (from the aspects of geology, environment, and climate, etc.). You can only proceed with foundation design and construction after confirming that the installation site meets all relevant requirements.

An improperly built foundation may lead to difficulties or troubles in equipment mounting, opening and closing of cabinet doors, and the future operation of the equipment. Therefore,

the foundation must be designed and constructed in compliance with certain standards, to meet the requirements of support structure, cable laying, and future maintenance.

Make sure at least the below requirements are met during foundation building:

- The bottom of the foundation pit must be compacted, filled and made even.
- The foundation must be built in compliance with the foundation drawing provided, or approved, by SUNGROW. The tolerance for the upper surface of the foundation is ± 5 mm.
- The foundation must provide sufficient and effective support for the equipment.
- The equipment must be positioned in a higher place, to protect its base and interior from rain erosion. It is recommended to build a foundation about 300 mm higher than the horizontal ground.
- Foundation design shall consider the impact of overall settlement on the grounding blocks, main circuit connections, and the connection between the external fire water piping and the BESS container. Even in the event of differential settlement, the foundation elevation difference shall not exceed 10 mm. The foundation depth shall reach the bearing stratum with sufficient bearing capacity, which shall be determined by the geological survey report. The foundation design shall also ensure safe and convenient maintenance operations for personnel.
- Set up a proper drainage system based on the local geological conditions.
- Build a cement foundation with sufficient cross-sectional area and height. The foundation height shall be determined by the constructor based on the on-site geological conditions.
- Take cable laying into consideration when building the foundation.

  In the process of foundation building, remove the muck immediately after excavation, to avoid affecting the hoisting and transport of the equipment.

- Build a maintenance platform around the foundation to facilitate future maintenance.
- During the foundation building, reserve sufficient space for the AC side cable trench according to the position and size of the cable inlet and outlet on the equipment, and embed the cable conduit in advance.
- Determine the specifications and quantity of the perforating gun according to the model and quantity of cables used.
- Both ends of each embedded conduit must be temporarily sealed off to prevent the ingress of foreign objects. Otherwise, it may lead to difficulties in wiring.
- After all the cables are connected, seal off the cable inlet and outlet and the connectors with fireproof mud or other suitable materials, to prevent rodents from entering the equipment.

  Pre-bury the grounding unit according to the applicable standards of the country/region where the project is located.

4.2.3 Installation Space Requirements

For effective heat dissipation and ease of maintenance, it is recommended to reserve sufficient space around the ESS during installation.

NOTICE

The clearance here refers to the clearance between cabinets, not foundations.

Installation of One ESS

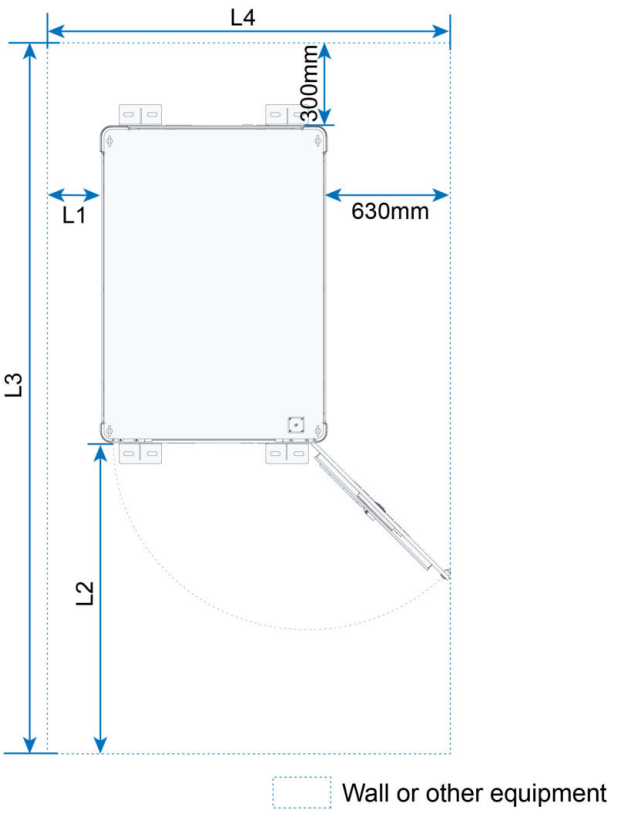

Figure 4-1 Space Required for One ESS

Maintenance Item	Clearance Requirements
Automatic PACK tooling maintenance	L1 ≥ 430 mm, L2 ≥ 2500 mm, L3 ≥ 4410 mm, L4 ≥ 2210 mm
Manual PACK tooling maintenance	L1 ≥ 430 mm, L2 ≥ 2000 mm, L3 ≥ 3910 mm, L4 ≥ 2210 mm

Installation of Multiple ESSs

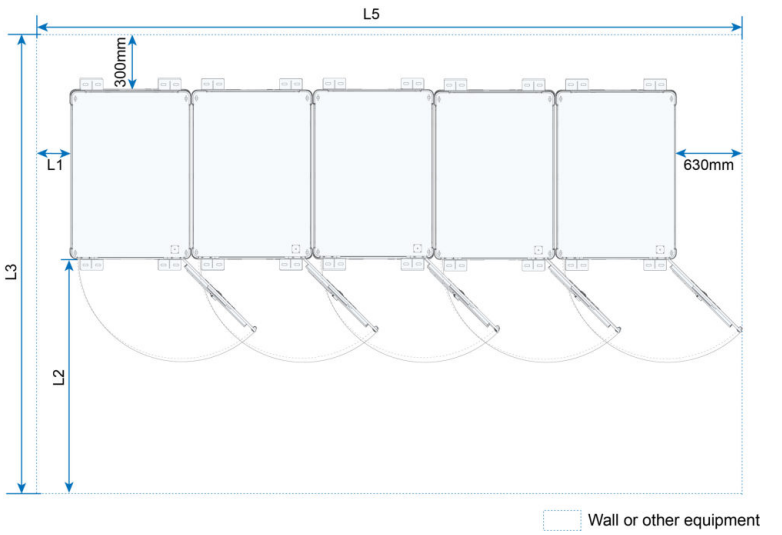

Figure 4-2 Space Required for ESSs in One Row

Maintenance Item	Clearance Requirements
Automatic PACK tooling maintenance	L1 ≥ 430 mm, L2 ≥ 2500 mm, L3 ≥ 4410 mm, L5 ≥ 6820 mm
Manual PACK tooling maintenance	L1 ≥ 430 mm, L2 ≥ 2000 mm, L3 ≥ 3910 mm, L5 ≥ 6820 mm

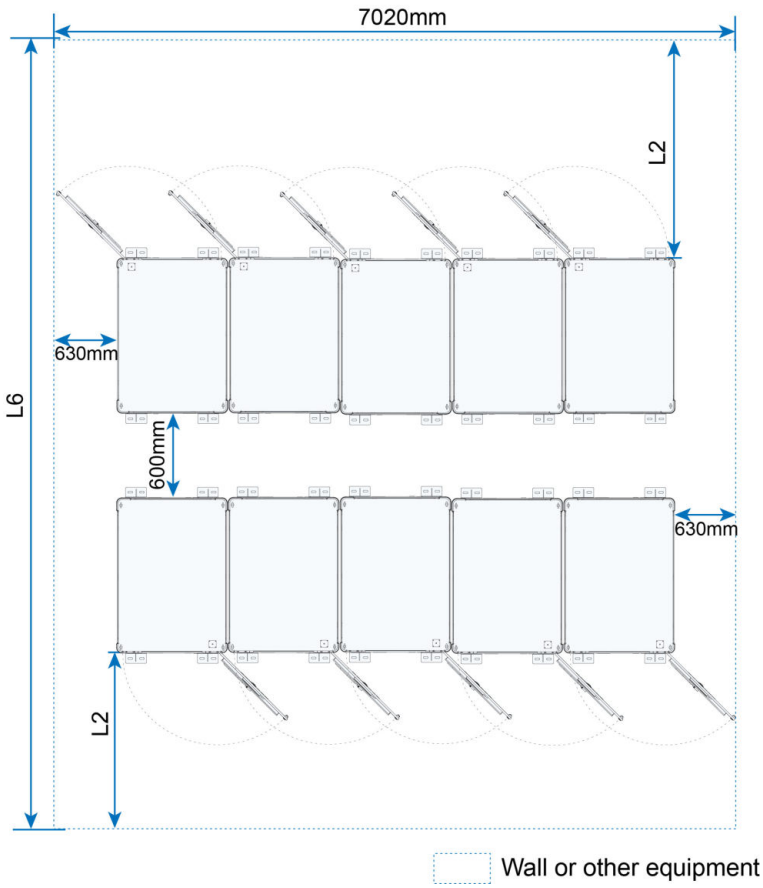

Figure 4-3 Space Required for ESSs in Two Rows (back to back)

Maintenance Item	Clearance Requirements
Automatic PACK tooling maintenance	L2 ≥ 2500 mm, L6 ≥ 8820 mm
Manual PACK tooling maintenance	L2 ≥ 2000 mm, L6 ≥ 7820 mm

*The figure is for reference only. The actual product may differ.

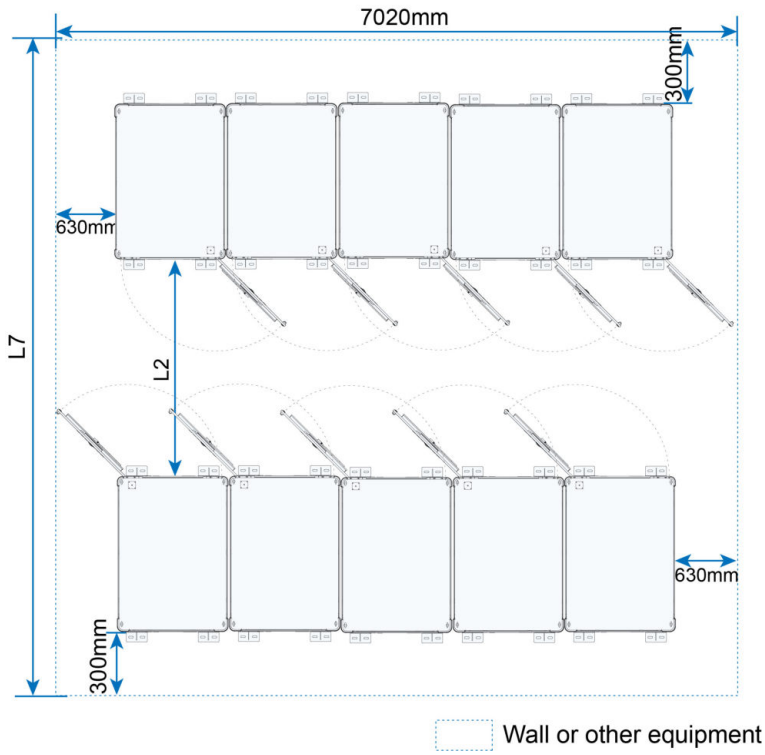

Figure 4-4 Space Required for ESSs in Two Rows (face to face)

Maintenance Item	Clearance Requirements
Automatic PACK tooling maintenance	L2 ≥ 2500 mm, L7 ≥ 6320 mm
Manual PACK tooling maintenance	L2 ≥ 2000 mm, L7 ≥ 5820 mm

*The figure is for reference only. The actual product may differ.

> When arranging the ESSs in two rows, ensure that the two rows are aligned on both sides. Avoid misaligned arrangements to minimize the risk of hindered heat dissipation.

With Obstructions in Heat Dissipation Path

If the ESS is installed indoors or if there are significant obstructions in the air outlet pathway, add ventilation equipment to enhance heat dissipation. The temperature at the air inlet must not exceed 45 °C to ensure long-term stable operation of the system.

For indoor installation, ensure that the distance from the top and two sides of the ESS to any obstructions that could hinder heat dissipation, such as walls, meets the following requirements:

- Maintain a space of ≥ 800 mm above the ESS for effective ventilation.

NOTICE

Ensure a ventilation rate of ≥ 2500 m^3/h and a cooling capacity of ≥ 7 kW at the rear air outlet of each ESS.

NOTICE

Outdoor installations where heat dissipation is significantly compromised by large obstructions above or beside the ESS are treated as indoor installations. In such cases, the distance from the cabinet to the obstruction must comply with the same requirements specified for indoor installations.

- Installing the ESS outdoors is recommended, as per the general plant design standards.
- If indoor installations are selected due to layout constraints: SUNGROW specifies indoor arrangement requirements from the perspective of product design and maintenance only. The owner/EPC shall consider plant-level requirements in these cases.

Instructions for PACK Maintenance Tooling

Two types of PACK maintenance tooling are available for the ESS: automatic and manual. The required clearance for maintenance during installation must be determined based on the dimensions of the selected tooling. For details, please refer to the illustration below.

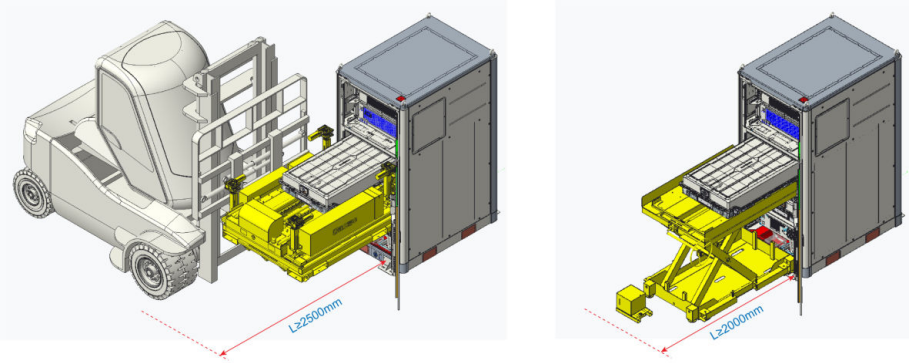

Automatic PACK tooling maintenance Manual PACK tooling maintenance

Figure 4-5 The Required Clearance for Maintenance

4.3 Handling with Forklift

You can move the ESS using a forklift if the ground on the installation site is flat. Forklift pockets are provided at the bottom of the ESS for the insertion of forklift forks.

To move the ESS using a forklift, make sure the below requirements are met:

- The forklift has sufficient load capacity.
- The forks are long enough for moving the equipment.

The forks must be inserted into the forklift pockets at the bottom of the equipment (see the figure below for the positions of the pockets). The depth of the forks inserted into the pockets should be the depth of the pockets.

- Transport, move, and place the ESS slowly and steadily. It is suggested to perform a test lift first, to make sure all requirements are met.
- Position the ESS on a stable surface only. The place must be free of obstacles or protrusions, with good drainage.

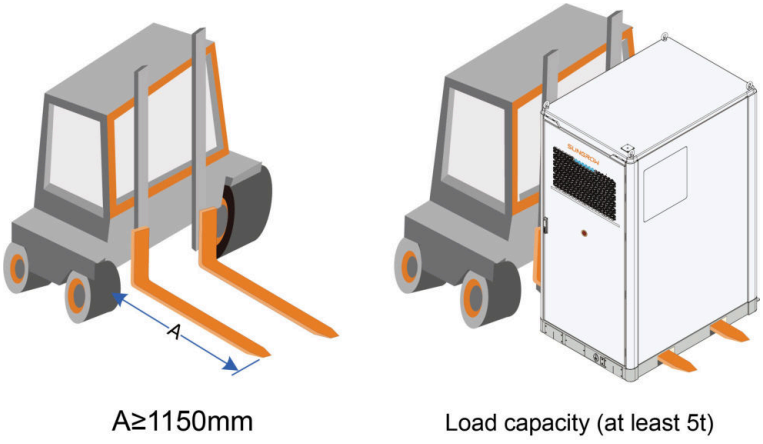

Figure 4-6 Handle with Forklift (Side)

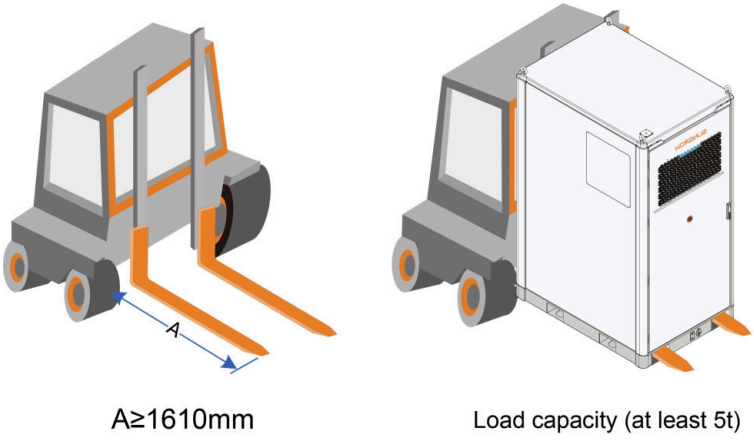

Figure 4-7 Handle with Forklift (Front)

⚠ WARNING

- **Move the ESS using a forklift through the bottom forklift pockets.**
- **Never insert the forklift forks into any position on the equipment else than the bottom pockets.**

The ESS will be delivered with forklift pockets exposed to air. It is suggested to cover the pockets with sealing plates after the installation is completed. The sealing plates are included in the accessories.

4.4 Hoisting and Transport

4.4.1 Safety Precautions

Strictly adhere to safe operating procedures throughout the hoisting process to ensure the safety of operators, equipment, and the surrounding environment.

Requirements for Hoisting

- Qualifications:
  - Engage a qualified specialized hoisting service provider to perform the hoisting.
- Foundation:
  - Ensure sufficient space is reserved in the cable trench, and the cable conduit is embedded in advance.
  - Clearly mark the designated area for the equipment on the foundation with lines.
  - Prior to hoisting, recheck the flatness of the foundation. The flatness deviation must not exceed 10 mm, and the slope must not exceed 5°.
  - Correct any excessive deviations in flatness or slope, or prepare in advance an adequate number of metal washers that match the sizes of the load-bearing points.
  - If a firewall is present on site, ensure that the designated area for the ESS is ≥ 150 mm away from the firewall.
- Familiarity with Equipment Arrangement
  - Properly determine the order of trailer arrivals at the site based on the project's equipment layout. Vehicles carrying lifting devices have priority for entry.
  - Determine the positions and orientations of all equipment.
  - Identify the location of any ESSs that are not fully equipped (not fully loaded with PACKs).
  - Ensure that all ESSs within the same block are of the same grade (battery grade).
- Equipment Status:
  - Verify that all equipment and lifting devices have undergone inspections, and that cabinet doors are securely closed and locked.

Selection of Cranes

The load capacity of the crane must be determined based on the weight of the load to be lifted, the crane's operating zone (operating radius and range of motion) and design parameters, the foundation conditions, and the specific hoisting requirements.

⚠ WARNING

Before hoisting, select an appropriate crane with sufficient load capacity based on an evaluation by a qualified hoisting service provider to ensure operation safety. SUNGROW shall not be held liable for any damage resulting from the use of inappropriate cranes.

Hoisting Device Requirements

- Ensure that the selected hoisting devices meet the requirements specified in “Hoisting Operation”.

Safety Instructions

⚠ WARNING

Perform operations in strict accordance with the local safe operating procedures relevant to the country or region, including but not limited to:

- **Stop hoisting immediately in severe weather conditions, such as heavy rain, fog, or strong winds.**
- **Set up warning signages or fence off a warning zone to prevent irrelevant personnel from entering the operating area, thus avoiding personal injury or death.**
- **Ensure that all personnel engaged in hoisting, loading, unloading, and anchoring operations have received relevant training, especially in safety.**
- **Do not stand directly beneath or within 10 meters of any moving equipment to avoid personal injuries or death.**
- **Conduct all work under the guidance of qualified technical personnel on site.**
- **Ensure that all tools and equipment used during the operation have undergone proper maintenance.**
- **Lift and lower the equipment gently, avoiding any dragging or collisions.**
- **Do not proceed with hoisting in low light conditions or when vision is not clear.**
- **Do not proceed with hoisting if there is any person or moving or movable objects on top of the equipment.**

4.4.2 Hoisting Operation

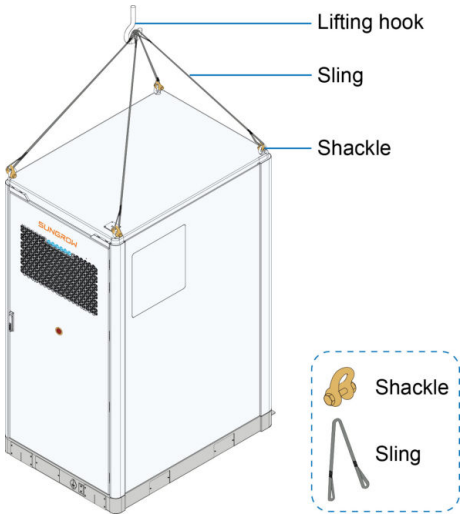

Figure 4-8 ESS Hoisting

*The figure here is for reference only and the actual product may differ.

- Three-meter slings are recommended, each with a rated capacity of six tons. (If folded, the unfolded length of a single sling must be at least four meters, with a rated capacity of 12 tons per sling.)

4.4.3 Hoisting Procedure

Step 1 Secure the lifting devices.

a. Pass the 4 slings respectively through the 4 shackles. (If the slings are used in a folded configuration, only two slings are required.)

b. Secure the 4 shackles respectively to the 4 lifting lugs at the top of the ESS.

c. Hang the 4 slings onto the crane's lifting hook. (If the slings are used in a folded configuration, only two slings are required.)

Step 2 Lift the equipment smoothly and stably.

a. Suspend lifting when the equipment is lifted 300 mm off the supporting surface. Then, check the connections between the slings and the equipment.

b. Ensure that the connections between the slings and the equipment are all secure and that the angle of the equipment relative to the horizontal plane is less than 5° after it settles naturally. Once confirmed, continue with the lifting.

Step 3 Lay the equipment down steadily in the designated area marked by lines on the foundation.

Step 4 Check and adjust the load-bearing points.

a. Verify that the equipment doors open and close properly, that the equipment frame shows no signs of deformation, and that the equipment rests securely and evenly on the supporting surface.

b. If any deformation is detected, lift the equipment slowly and add washers at the load-bearing points. Then, lower the equipment again gradually, until it is fully seated with each load-bearing point completely bearing the weight.

Step 5 Remove the lifting devices.

--End

Ensure the equipment is securely and fully seated on the foundation within the designated area and neatly positioned. Verify that the equipment is free from deformation and that its doors open and close smoothly.

4.5 Securing ESS

After moving the ESS to the target position, secure it in place. You can secure the equipment by welding or using L-shaped angle steels as needed.

Secured by Welding

Secure the ESS bottom to the foundation by welding. Apply anti-corrosion treatment to the welding points after welding is completed.

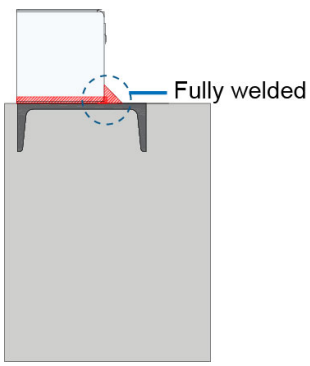

Figure 4-9 Full welding schematic

* The figure is for reference only. The product received may differ.

Secured with L-shaped Angle Steels

As shown in the figure below, mounting holes for L-shaped angle steels are provided at the bottom of the ESS.

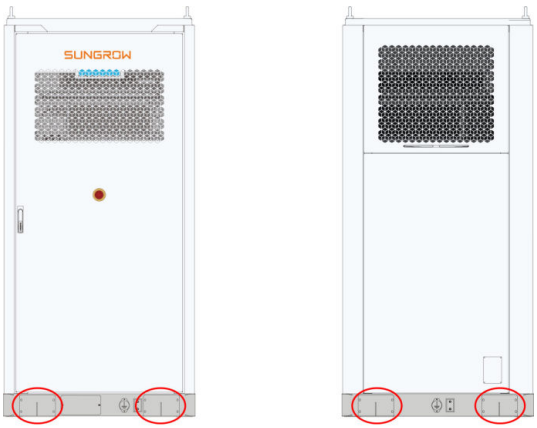

Figure 4-10 L-shaped Angle Steels

Installation Tools

Tools that may be used when installing the L-shaped angle steels are as follows:

No.	Item	Source
1	Marker	Not included in the scope of delivery
2	Hammer drill	Not included in the scope of delivery
3	Angle steel	Included in the scope of delivery
4	M16 expansion bolt	Not included in the scope of delivery
5	M16 screw	Included in the scope of delivery

Installation Method

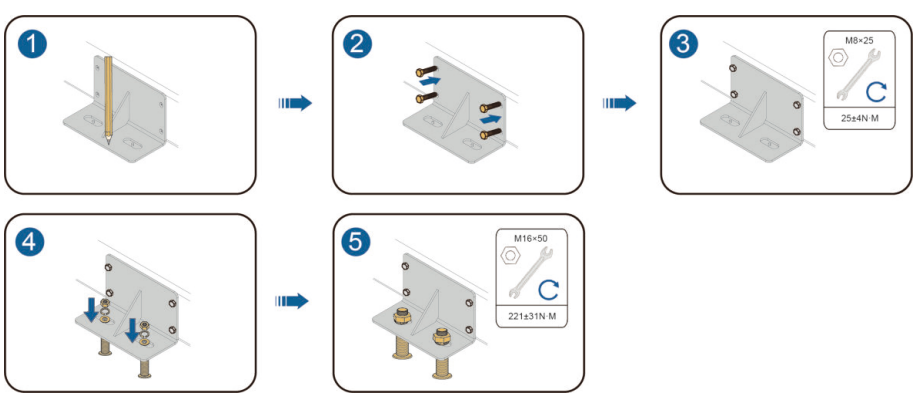

4.6 Removing Films

After securing the ESS in place, remove the 3M protective films at the air inlet, air outlet, and door lock.

Remove the 3M film with yellow "Key" label to get the door key.

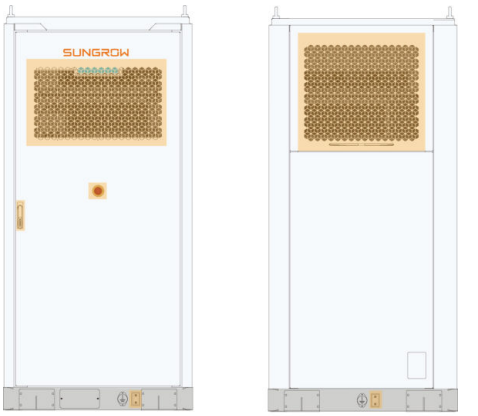

*The figure is for reference only. The actual product may differ.

5 Electrical Connection

5.1 Precautions

⚠ DANGER

High voltage! Electric shock!

- **It is strictly forbidden to directly touch the live parts in the unprotected state!**
- **Before installation, ensure that the all switches are off.**

⚠ WARNING

Sand and moisture penetration may damage the electrical equipment in the system, or affect their operating performance!

- **Avoid electrical connections during sandstorms or when the relative humidity in the surrounding environment is greater than 95%.**
- **Perform electrical connection when there is no sandstorm and the weather is fair and dry.**

⚠ WARNING

- **Before wiring, check and ensure that the polarity of all input cables is correct.**
- **During electrical installation, do not forcibly pull any wires or cables, as this may compromise the insulation performance.**
- **Ensure that all cables and wires have sufficient space for any bends.**
- **Adopt the necessary auxiliary measures to reduce the stress applied to cables and wires.**
- **After completing each connection, carefully check and ensure that the connection is correct and secure.**

⚠ WARNING

When an external short circuit occurs in the RACK circuit and the switch box fuse produces a protective action, the fuse and the two DC contactors must be replaced at the same time.

5.2 Electrical Connection Overview

The wiring diagram of the ESS is shown below:

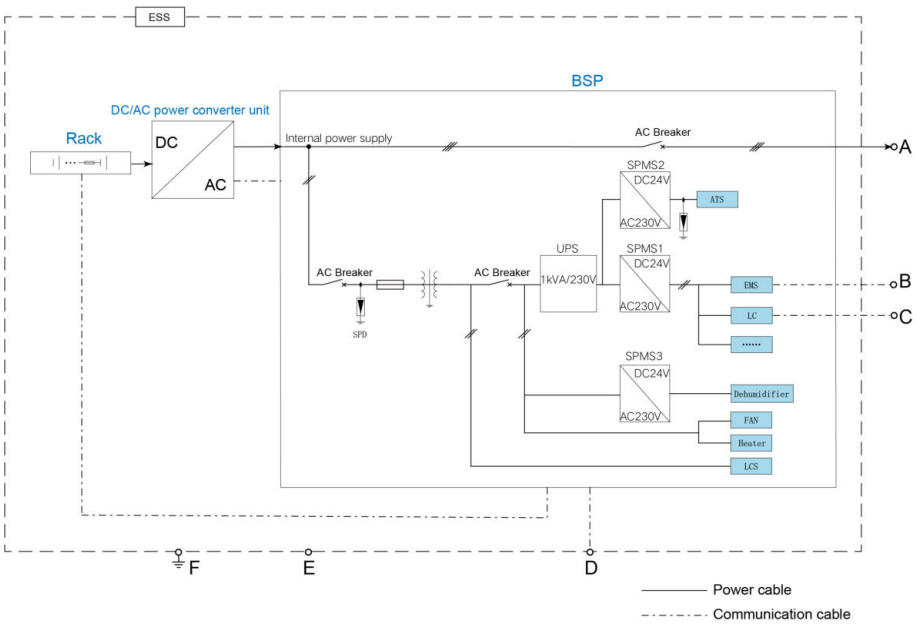

Figure 5-1 Wiring Diagram

Table 5-1 Interface Description

No.	Designation	Recommended Cable Specifications*
A	AC output port	4×95 mm^2/copper cable**
B	EMS communication port (connection port 3)***	2×0.5 mm^2 shielded twisted-pair cable
C	LC communication port (connection port 3)	2×0.5 mm^2 shielded twisted-pair cable
D	Ethernet communication port	CAT5E S/FTP
E	External auxiliary power supply port****	2×4 mm^2
F	Grounding point	70–95 mm^2 yellow-green cable or grounding flat steel

*The above cables are not included in the scope of delivery and need to be prepared separately.

**If aluminum cables are used, prepare M12 OT/DT terminals suitable for the cable size.

***The EMS is optional.

****The system is equipped with an internal auxiliary power supply as standard. The external auxiliary power supply is optional.

⚠ WARNING

- **Electrical connections must all be performed in strict accordance with the wiring diagram.**
- **Electrical connections must all be performed when the equipment is completely voltage-free.**

⚠ WARNING

Operations related to the electrical connection must only be performed by qualified electrical engineers, all in compliance with the "Safety Precautions" specified in this manual. SUNGROW shall not be held liable for any personal injury or property damage arising from failure to follow the safety instructions.

NOTICE

- **The installation and wiring of the ESS must conform to the applicable standards or regulations in the country/region where the project is located.**
- **Failing to follow the relevant installation and wiring requirements in this manual may result in equipment or system failure, and the damage caused therefrom will not be covered by warranty.**

5.3 Preparation Before Wiring

5.3.1 Preparing Installation Tools


Safety gloves


Goggles


Safety shoes


Protective clothing


Torque screwdriver


Wire stripper


Hydraulic pliers


Heat gun

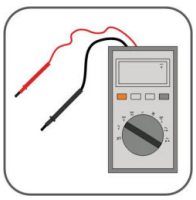
Multimeter


Screwdriver


Torque wrench

5.3.2 Opening Cabinet Door

Open the cabinet door before wiring.

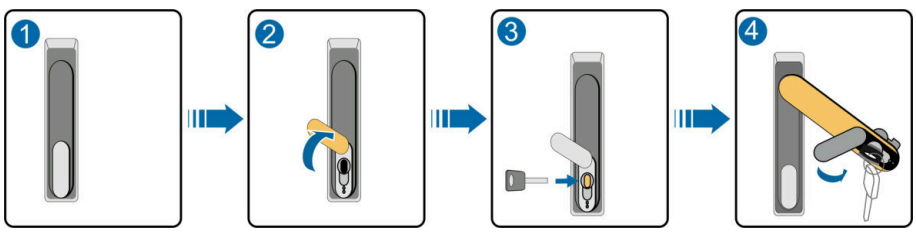

Figure 5-2 Open the Front Door

Steps	Introduction
1	Door locked
2	Move the cover above the lock hole
3	Insert the door key and turn it clockwise
4	Rotate the handle counterclockwise to the position shown in the figure to open the front door.

5.3.3 Prepare Cables

⚠ DANGER

Before electrical connection, check and ensure that the cables are all intact and well-insulated. Poor insulation or cable damage may result in safety hazards. If necessary, replace the cable immediately.

The cables must meet the following requirements:

- The current carrying capacity of the cable meets requirements. Factors affecting the current carrying capacity of a conductor include but are not limited to:
  - Environmental conditions;
  - Type of the insulation material of the conductor;
  - Cabling method;
  - Material and cross-sectional area of the cable.

- Select cables with a proper diameter according to the maximum load, and the cables should be long enough.
- Ensure that all cables and wires have sufficient space for any bends.
- During electrical connection, do not forcibly pull any wires or cables, as this may diminish their insulation performance.
- All DC input cables must be of the same specifications and materials.
- AC output cables of three phases must be of the same specifications and materials.
- Only flame retardant cables can be used.
- Keep a sufficient distance between the cables and the heat-generating components, to prevent the cable insulation layer from aging or getting damaged due to high temperature.
- After completing each connection, carefully check that the connection is correct and secure.
- Adopt necessary auxiliary measures to reduce the stress applied to cables and wires.
- Select cables with appropriate cross-sectional areas, according to the actual environmental conditions for heat dissipation of the cables laid on-site.
- Select communication cables equipped with corresponding shielding protection features according to the requirements of SUNGROW.
- Secure the power cables and the communication cables separately. Ensure a minimum space of 10cm between the lines of strong and weak electricity to avoid electromagnetic interference.
- Inspect the connection between the wiring terminal and the copper bar. If any part of the heat-shirk tubing is caught between them, remove it immediately. Otherwise, it may lead to poor contact or even damage due to heat.

NOTICE

- **The cables used should comply with requirements of local laws and regulations.**
- **The cable color in figures in this manual is for reference only. Please select cables according to local standards.**

Crimp OT/DT terminals

Follow the steps shown below to crimp terminal.

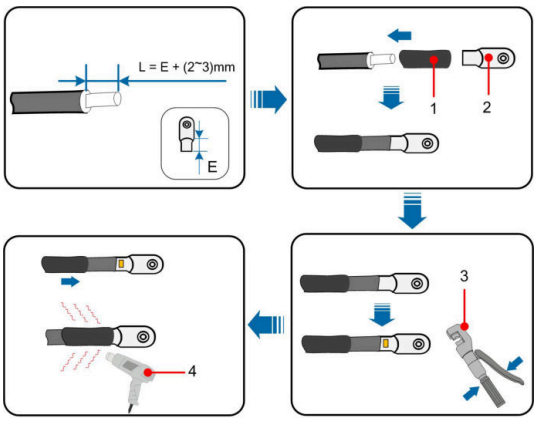

No.	Name	No.	Name
1	Heat shrink tubing	2	OT/DT terminal
3	Hydraulic pliers	4	Heat gun

NOTICE

- **Strip the cables with caution. Avoid scratching the core wires.**
- **After crimping, the conductor crimp barrel of the OT/DT terminal must fully enclose the core wire, forming a closed cavity that ensures a tight and secure connection between the wire and the terminal.**
- **Take appropriate protective measures when using a heat gun to prevent heat damage to the equipment.**

Crimp the Ferrule

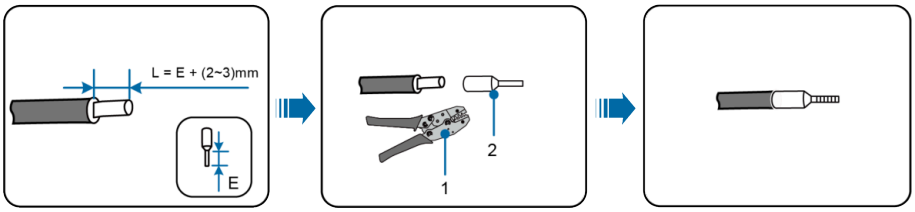

No.	Name
1	Crimping tool
2	Ferrule

5.3.4 Cable Connection

⚠ DANGER

- **When fastening the product and terminals, tighten the fasteners at the specified torques using proper tools and leave marks accordingly. Failure to do so may damage the product, and such damage will not be covered by the warranty. Unreliable connection may cause fire or even burn the product.**
- **During electrical connection, do not forcibly pull any wires or cables, as this may diminish their insulation performance.**
- **Do not connect aluminum terminals directly to the copper bar, as this may cause galvanic corrosion and compromise the reliability of the connection.**

NOTICE

- **When using copper-aluminum bimetallic washers, the outer profile of the washer must be no smaller than that of the OT/DT terminal. Pay attention to the correct orientation, ensuring that the aluminum side of the washer contacts the aluminum terminal, and the copper side contacts the copper bar.**
- **It is recommended to source the washers and terminals from the same manufacturer.**
- **The bolts must be securely tightened, with at least two exposed threads remaining.**
- **Use screws of an appropriate length for wiring. The screw shall protrude 2–3 threads (approximately 3 mm) through the mounting hole in the copper bar. Using overly long screws may compromise insulation performance or even cause short circuits.**

5.3.4.1 Main Power Supply Wiring

Main power supply wiring can use copper cables, copper-clad aluminum cables, or aluminum alloy cables.

- When using copper-core cables or copper-clad aluminum cables, select copper terminals, and complete the connections by referring to the figure below.

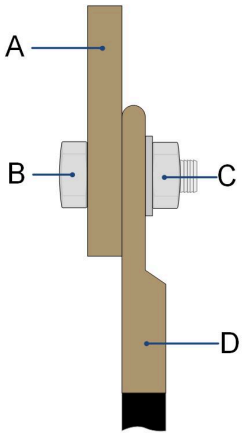

Figure 5-3 Connection Using Copper Terminal

Item	Name	Item	Name
A	Copper bar	C	Flange nut
B	Bolt	D	Copper terminal

- When selecting aluminum alloy cables, use copper-aluminum bimetallic terminals, or aluminum terminals in combination with copper-aluminum bimetallic washers. Please complete the connections by referring to the figure below.

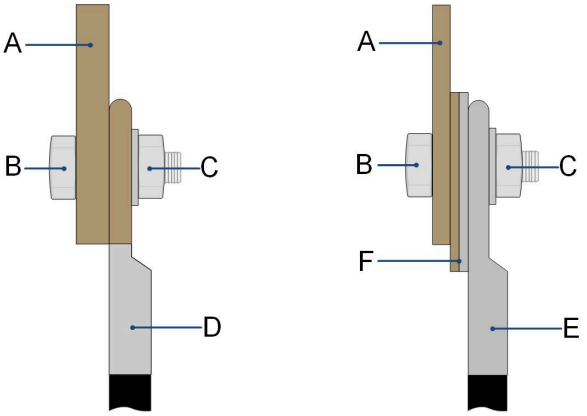

Figure 5-4 Connections Using Copper-Aluminum Bimetallic Terminal (Left) and Aluminum Terminal (Right)

Item	Name	Item	Name
A	Copper bar	D	Copper-aluminum bimetallic terminal
B	Bolt	E	Aluminum terminal

Item	Name	Item	Name
C	Flange nut	F	Copper-aluminum bimetallic washer

5.3.4.2 Auxiliary Power Supply Wiring

Auxiliary power supply wiring can use copper cables, copper-clad aluminum cables, or aluminum alloy cables.

- When using copper-core cables or copper-clad aluminum cables, select copper terminals, and complete the connections by referring to the figure below.

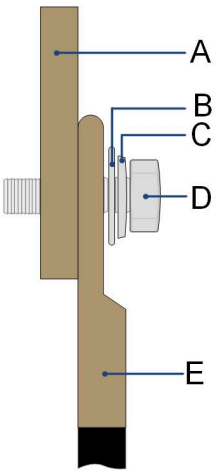

Figure 5-5 Connection Using Copper Terminal

Item	Name	Item	Name
A	Copper bar	D	Bolt
B	Flat washer	E	Copper terminal
C	Spring washer		

- When selecting aluminum alloy cables, use copper-aluminum bimetallic terminals, or aluminum terminals in combination with copper-aluminum bimetallic washers. Please complete the connections by referring to the figure below.

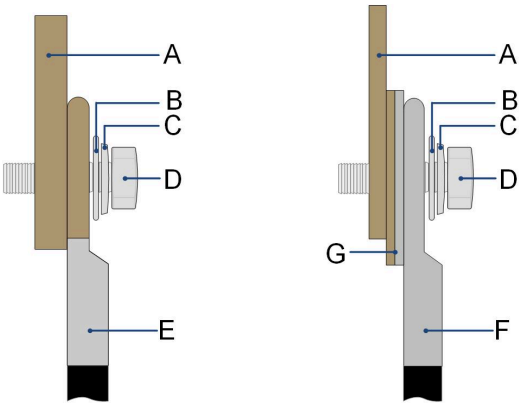

Figure 5-6 Connections Using Copper-Aluminum Bimetallic Terminal (Left) and Aluminum Terminal (Right)

Item	Name	Item	Name
A	Copper bar	E	Copper-aluminum bimetallic terminal
B	Flat washer	F	Aluminum terminal
C	Spring washer	G	Copper-aluminum bimetallic washer
D	Bolt		

5.3.5 Cable Inlet Design

Cables connecting the ESS to the external devices can be led through the cable inlet/outlet at the bottom of the ESS. Take protective measures for the cables, such as routing cables through conduits, to avoid damage caused by rodents. After wiring is completed, seal off the cable inlet/outlet using fireproof mud or other appropriate materials.

The cable inlet/outlet design is illustrated in the figure below.

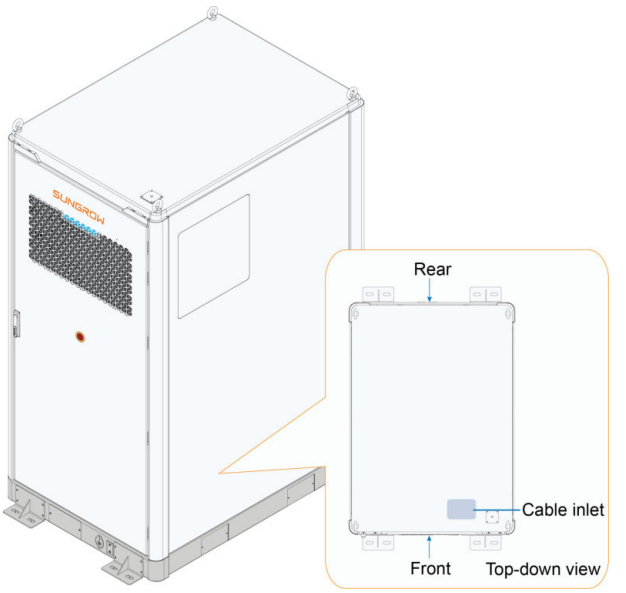

Figure 5-7 Cable Inlet

*The figure is for reference only; the actual product may differ.

NOTICE

If it is required to pre-bury cable conduits in the cable inlet/outlet area during construction, please confirm the specific position with SUNGROW.

NOTICE

After wiring, seal off the cable inlet/outlet by filling the gaps around the cables with fireproof/waterproof materials, such as fireproof mud, to prevent the ingress of foreign objects or moisture, thus avoiding affecting the product's long-term operation.

5.4 Ground Connection

NOTICE

Grounding must be completed by strictly following the applicable local standards and regulations.

NOTICE

- **Before grounding, clean the surface and threads of the grounding point to avoid compromising the grounding performance.**
- **After grounding is complete, apply anti-corrosion treatment to the ground connection area to avoid rust.**

Overview

Grounding can be made in the following two ways: welding a grounding flat steel, or connecting a grounding cable. For the position of the grounding point, see “**ESS External Design**”.

Grounding Flat Steel (Recommended)

Remove the protective tape from the grounding point and weld the hot-dip galvanized flat steel to the grounding point (the area where the flat steel and the ESS are joined together should be 40 mm x 70 mm). Spray paint the whole welding area after completing welding.

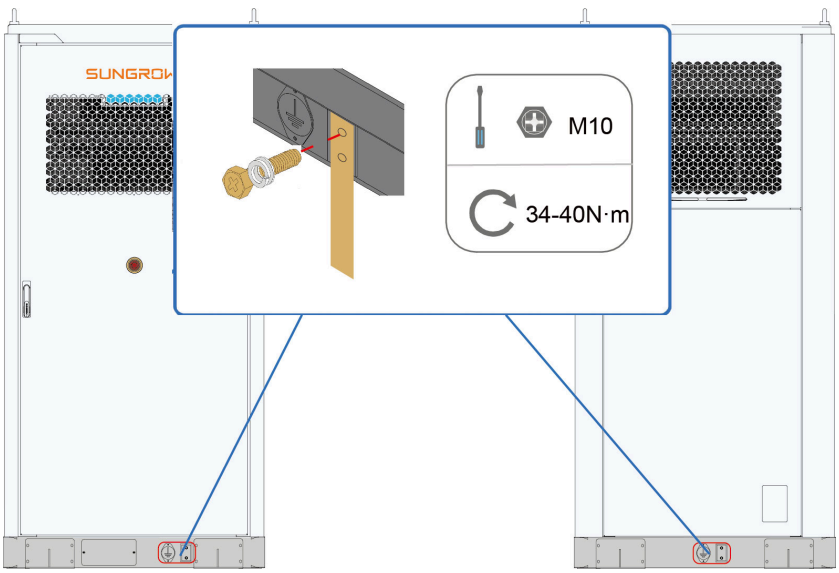

Figure 5-8 ESS Grounding Diagram

*The figure is for reference only and the actual product shall prevail.

Grounding Cable

Use a 70 mm^2–95 mm^2 copper grounding cable to connect the grounding point on the ESS to a designated grounding point properly and reliably (the grounding point is covered with protective tape upon delivery, which should be removed before wiring).

Crimp the DT terminal. For details, see 5.3.3 Prepare Cables. Secure the DT terminal to the wiring hole with an M10 bolt at a tightening torque of 34–40 N·m.

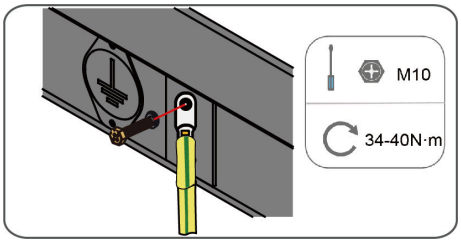

*The figure is for reference only and the actual product shall prevail.

Carry out external ground connection in compliance with the actual on-site conditions and the instructions by the plant staff.

Measure the ground resistance after completing the grounding. Make sure the resistance does not exceed 4 Ω.

> The specific ground resistance must comply with the applicable national/local standards and regulations.

5.5 AC Connection

5.5.1 Safety Precautions

⚠ WARNING

Accidental touching of live terminals can cause fatal electric shock!

- **Ensure that the AC/DC switches of the DC/AC power converter cabinet are open, and that the wiring terminals are dead.**
- **Connecting to the power grid must be approved by the relevant department and comply with all power-related safety instructions and specifications.**

⚠ WARNING

- **When connecting to the AC grid, disconnect the upstream AC side circuit breaker to ensure that there is no voltage at the contact terminals.**
- **Connect to the grid only if approved by the utility grid and all relevant safety instructions are followed.**
- **The AC output is not grounded inside the device.**
- **The DC and AC circuits are isolated from the enclosure. If required by the relevant national electrical codes, the installer is required to connect the system.**

5.5.2 AC Output Wiring

Step 1 Switch off the upstream AC circuit breaker and measure with a multimeter to ensure no voltage is present at the terminals.

Step 2 Lead the cables to the AC wiring area inside the cabinet through the cable inlet.

Step 3 Connect the AC cables properly in the designated positions.

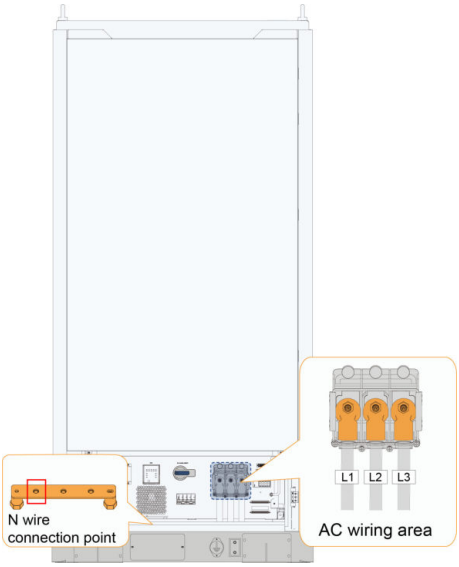

Figure 5-9 AC Wiring Area

Step 4 Strip the protective layers of the cables using wire strippers to expose the copper cores.

Step 5 Crimp the OT terminals. For details, see 5.3.3 Prepare Cables.

Step 6 Secure the OT terminals to the wiring holes with M12 bolts at a tightening torque of 40 N·m (for detailed wiring instructions, please refer to 5.3.4.1 Main Power Supply Wiring).

Step 7 Pull gently the cables backward after wiring, ensuring the cables are long enough.

Step 8 Close the protective cover for terminals, fasten the snap-ons on both sides, and tighten the four screws.

NOTICE

- **The terminals on the power distribution box panel support cables with an diameter of up to 26 mm.**
- **Perform wiring in strict accordance with the correct phase sequence.**

--End

5.6 Auxiliary Power Supply Wiring

Devices of the system, such as the internal liquid cooling unit, 24 Vdc device, and fans, are supplied by an external or internal auxiliary power supply. Internal auxiliary power supply is used for this system by default. If the system uses an internal power supply, please disregard the following content.

Prerequisite

Power Supply Mode

The auxiliary power supply of the system includes the internal auxiliary power supply and the external auxiliary power supply:

- If the external auxiliary power supply is adopted, use the auxiliary power supply port inside the BSP of the ESS for wiring.

Steps for External Auxiliary Power Supply Wiring

Step 1 Make sure the circuit breakers of the upstream and downstream devices are all in the open state.

Step 2 Pass the cables through the cable inlet/outlet into the ESS.

Step 3 Connect the AC cables properly in the designated positions.

Table 5-2 Port Definition

Mode	Port	Introduction	*Recommended cable specifications
230 Vac external power supply	Auxiliary power supply L	Connected to a customer-side power source	4 mm^2
	Auxiliary power supply N		

*These are recommended cable specifications. You may make adjustments based on actual requirements.

Step 4 Complete the wiring by referring to the port marks on the equipment and the above port definitions. After completing the wiring, secure the terminals at a tightening torque of 5 N·m (for detailed wiring instructions, please refer to 5.3.4.2 Auxiliary Power Supply Wiring).

--End

5.7 Communication Wiring

The ESS provides interfaces for external Ethernet communication, LC communication, EMS communication, and FSS power supply wiring.

- The default IP address for port LC-ETH1 is 192.168.1.100. The subnet mask is 255.255.255.0 and the gateway is 192.168.1.1.
- The default IP address for port LC-ETH2 is 192.168.13.100. The subnet mask is 255.255.255.0 and the gateway is 192.168.13.1.
- The default IP addresses for the ports of the EMS are as follows: 192.168.13.200 for ETH1, 192.168.1.200 for ETH2, and 13.13.13.13 for ETH5.

5.7.1 Ethernet Communication Wiring

The positions of the Ethernet communication ports are shown in the figure below.

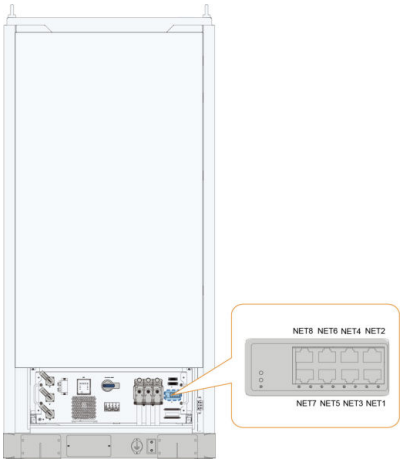

Figure 5-10 Communication Interfaces

Table 5-3 Interface Description

Position	Designation
NET1	Connected to EMS
NET2	Connected to LC (internal connections are completed at factory)
NET3	Reserved
NET4	Connected to EMS
NET5–NET6	Reserved
NET7–NET8	Used for networking between ESSs

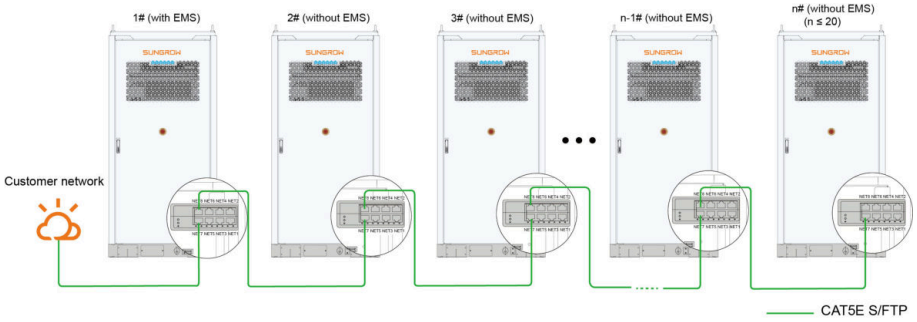

Figure 5-11 Networking Diagram Between ESSs

For the same transformer (with capacity ≤ 3.15 MVA):

- In the grid-connected scenario, up to 25 ESSs can be operated in parallel.
- In the off-grid scenario, up to 20 ESSs can be operated in parallel.

(If ESSs are connected from the AC side to the LV side of the transformer, the shortest cable length among these connections shall be used.) It is recommended that the cable length be > 20 m and 95 mm² copper cables be used.

- The ESS with an EMS is accessed to the customer network and connected hand-in-hand with other ESSs that do not have EMS.
- Users can check from the label on the product whether it is equipped with an EMS.
- NET7 and NET8 are both used for networking between ESSs. No distinction is made between these two ports.

5.7.2 EMS/LC Communication Wiring

CONN1 and CONN2 on the BSP house terminals for ATS communication and FSS power supply wiring, etc.

The positions of CONN1, CONN2, and EMS communication interface are shown as follows.

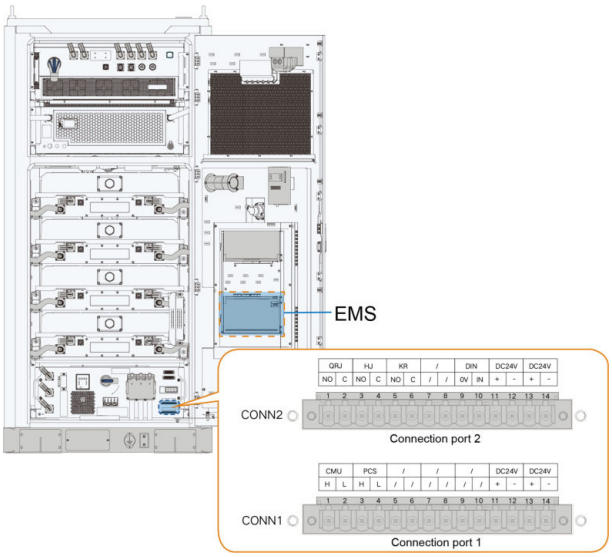

Figure 5-12 Communication Interfaces

Port	Position	Description
CONN1	CONN1-1/2	CMU communication, reserved for maintenance
	CONN1-3/4	Parallel communication between DC/AC power converter units

Port	Position	Description
	CONN1-5/6	Reserved
	CONN1-7/8	
	CONN1-9/10	
	CONN1-11/12	Reserved for 24 Vdc
	CONN1-13/14	
CONN2	CONN2-1/2	“Aerosol fire extinguishing agent spraying” dry contact output
	CONN2-3/4	“FSS fire alarm” dry contact output
	CONN2-5/6	"Combustible gas detector" dry contact output
	CONN2-7/8	Reserved
	CONN2-9/10	Reserved for DC/AC power converter unit's on/off-grid switching input (connected to the ATS)
	CONN2-11/12	Interface reserved for ATS power supply
	CONN2-13/14	Interface for dehumidifier power supply

EMS External Communication

Port	Designation	Description
ETH1–ETH2	Ethernet port	Used for data exchange. It can be connected to the background master via devices such as a router or switch
ETH5	Ethernet port	Reserved for the master-standby feature
DI	DI port	Dry contact input
DO1–DO4	DO port	Relay output Relay specifications: 250 Vac/1 A, or 30 Vac/1 A
A1B1–A7B7	RS485 communication port	Provides 7 positions for RS485 wiring It can be connected to slave devices or background
IRIG-B	Used for IRIG-B time synchronization	Reserved

5.8 Post-wiring Operations

Check the wiring thoroughly and carefully when all electrical connections have been completed. In addition, perform the following operations:

- Check all air inlets and outlets for blockage.
- After wiring, check that the connections are correct, then seal off the cable inlet/outlet holes using fire-/water-stop materials such as firestop mud. This prevents impacts on the equipment's long-term operation due to the ingress of moisture or rodents. If water-stop connectors are used for sealing, check that these connectors are properly tightened. Additionally, close off the unused terminals.

NOTICE

When firestop putty is used as the sealing material, the following requirements shall be met:

- **The apparent density shall be ≤ 1.6 × 10^3 kg/m^3, and the air permeability shall be ≤ 3.5 m^3/(m^2 h). When immersed in tap water, a 3% ammonia solution, or a 3% hydrochloric acid solution at 20°C±5°C, the material shall exhibit acid resistance for ≥ 3 days without swelling or cracking.**
- **When exposed to an environment with a relative humidity of (90±5)% and a temperature of 45°C±5°C, the material shall exhibit heat and humidity resistance for ≥ 360 h, without cracking or chalking. When subjected to freeze-thaw cycles consisting of immersion in water at 23°C±2°C for 18 h, freezing at -20°C±2°C for 3 h after the temperature reaches -18°C, and exposure to 50°C±2°C for 3 h, the material shall withstand at least 15 cycles without cracking or chalking.**
- **In addition to meeting the national standards of the country where they are used, the foam sealant and firestop putty shall not release corrosive gases such as chlorine, ammonia, or sulfur within the operating temperature range of -40°C to 85°C. Halogen-free and environmentally friendly sealing materials shall be used.**
- **Fire resistance integrity (Fr) ≥ 3.0 h. The cotton pad on the unexposed side must not ignite, no flame shall persist for more than 10 s, and the gap probe must not penetrate any gaps. Fire resistance insulation (Fr) ≥ 3.0 h. The temperature rise at any point on the unexposed side shall not exceed 180°C, and the temperature rise at any point on the frame surface on the unexposed side shall not exceed 180°C. After the fire resistance test, a water spray test shall be conducted. The firestop putty shall not develop any holes that could result in water flow on the unexposed side.**

- Ensure the space between cable connectors in the wiring area meets the requirements in safety regulations.
- Seal the gap around the cable inlet holes.
- Put all protective covers back in place firmly.

- After electrical connections are completed, inspect the wiring thoroughly and carefully. Ensure that all connections are correct and secure.

⚠ WARNING

- **Moisture may enter the product if it is not properly sealed.**
- **Rodents may enter if the product is not properly sealed.**

Locking Cabinet Doors

Step 1 Reinstall the protection cover of the wiring area in the reverse order of removal.

Step 2 Lock the cabinet door, pull out the key, and store it securely.

--End

NOTICE

Make sure that the seal around the container door does not curl when the door is closed!

6 Battery Connection

6.1 Precautions

Always follow the safety instructions in this manual. In order to avoid personal injury and property damage that may occur during installation or operation, and extend the service life of this product, please carefully read all safety instructions.

Improper or incorrect use may result in:

- A threat to the life and personal safety of the operator or third parties;
- Damage to the Battery Energy Storage System Container or other property of the operator or third party.

> - The safety precautions in this manual do not cover all specifications to be followed, and all operations should be performed based on the site conditions.
> - SUNGROW shall not be liable for any loss arising from failure to follow the safety precautions in the manual.

⚠ WARNING

- **While installing the device with hazardous voltage, follow relevant regulations and local installation safety guidelines.**
- **Please observe the regulations on the correct use of tools and personal protective equipment.**
- **All connections must be carried out with distinctive guidance. Any guess and ambiguous attempts must be prohibited.**
- **Tools with an insulating protective coating must be used.**

- Connecting cables should meet the voltage and current requirements.
- All connectors must be safe and reliable to avoid loosening or virtual contact. They must be corrosion-resistant, wear-resistant and shock-proof.
- All connections must comply with the requirements of relevant national standards to prevent arc discharge in any form.
- The connections of internal batteries must be equipped with anti-vibration and antiloosening devices. Temperature, voltage and current sensors must be connected safely and reliably, to prevent loosening, ageing and extrusion. All sensor cables must be free of metal exposure.
- Any type of short circuit should be prevented in the connection process.
- Operators must use this product with personal protective equipment.

- All connections must be carried out with distinctive guidance. Any guess and ambiguous attempts must be prohibited.
- Key connections must be correct, reliable (without loosening) and in good contact, without short-circuits.
- All the finished connections must be measured and confirmed one by one.
- All connections must not be in contact with the casing or other components or shortcircuited.
- If there are other uncertain factors, please consult the after-sales technicians of SUNGROW before any operation.

6.2 Cable Connection

Tools

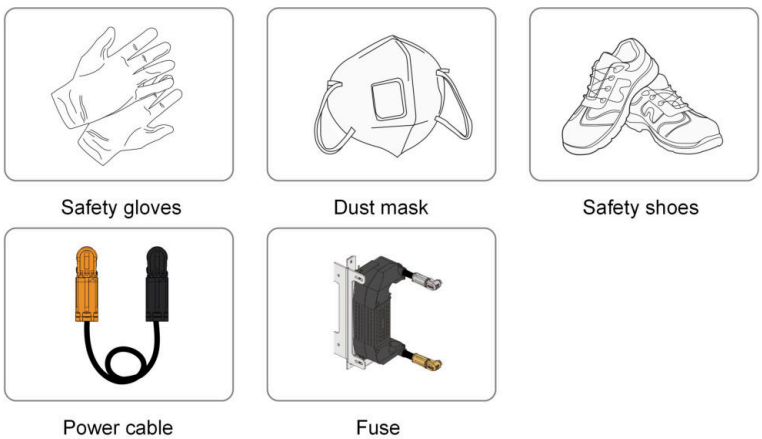

Figure 6-1 Installation Tools

Step 1 Before connecting the power cable, put on insulated shoes and safety gloves. Before connecting the power cable between PACKs, disconnect the wiring between the PACK and the DC/AC power converter unit first.

Step 2 Install the fuse. Open the cabinet door, and remove the sponge separators that hold the fuse plugs.

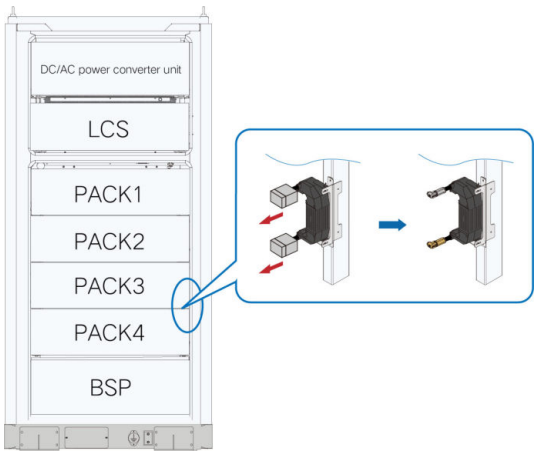

Figure 6-2 Fuse Location

Step 3 Insert the plugs that come with the fuse into the PACK bases properly.

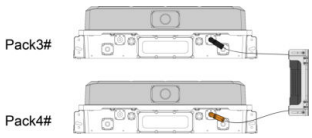

Figure 6-3 Insert Fuse Plugs into PACK Bases

⚠ WARNING

Once the aviation plug is connected in place, you will hear a "click". Ensure that the connection is secure.

- Insert the positive aviation plug into the designated positive terminal on the PACK base, and the negative plug into the designated negative terminal on the base. Note that the negative aviation plugs are pre-connected at the factory; only the positive plugs need to be connected on-site. Orange indicates positive, and black indicates negative. Once the aviation plug is connected in place, you will hear a "click".
- When connecting the power cables, you can adjust the position of the fuse properly.

Step 4 Connect the power cables between the PCAKs. The positive connector of the power cable between PACKs is secured on the RACK, and the negative connector is secured on the side bracket with a quick-connect clip and cable tie.

⚠ WARNING

Once the aviation plug is connected in place, you will hear a "click". Ensure that the connection is secure.

NOTICE

When connecting the power cables between the PACKs, remove the negative connector of the power cable from the quick-connect clip on the side bracket, and then insert it into the designated negative terminal on the base.

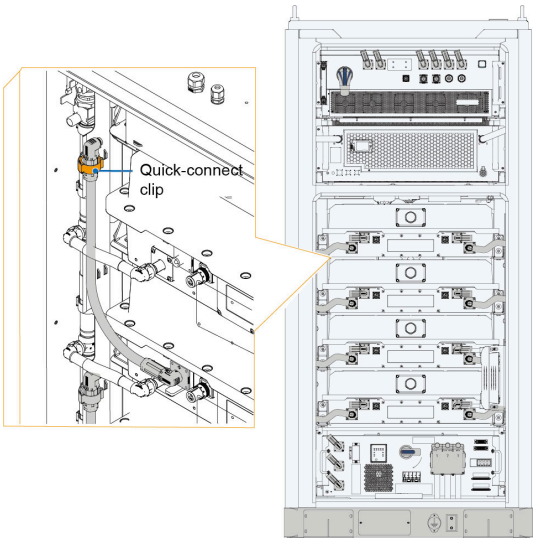

Figure 6-4 Quick-connect Clip

a. Connect the BAT- of PACK1# to the BAT+ of PACK2#.

b. Connect the BAT- of PACK2# to the BAT+ of PACK3#.

Step 5 Connect the power cable between the PACK and the DC/AC power converter unit:

a. Connect the BAT+ of PACK1# to the BAT+ of the DC/AC power converter unit.

b. Connect the BAT- of PACK4# to the BAT- of the DC/AC power converter unit.

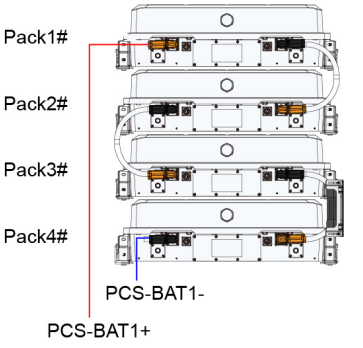

Figure 6-5 PACK Wiring Diagram

⚠ WARNING

Once the aviation plug is connected in place, you will hear a "click". Ensure that the connection is secure.

--End

7 Powering up and Shutdown

7.1 Powering up

⚠ WARNING

- **The equipment can only be put into operation after confirmation by a professional and approval of the local energy department.**

⚠ WARNING

- **For equipment that has a long shutdown time, inspect it thoroughly and carefully and make sure all the indicators meet the relevant requirements before powering up.**

7.1.1 Inspection Before Powering up

Before powering up the equipment, check the following items carefully.

- Check whether the wiring is correct.
- Check whether the protective covers inside the equipment are installed firmly.
- Check whether the emergency stop button is released.
- Check and ensure that there is no grounding fault.
- Check whether the AC and DC voltages meet startup conditions and ensure that there is no over-voltage with a multimeter.
- Check and ensure that no tools or components are left inside the equipment.
- Check all air inlets and outlets for blockage.
- If the equipment has been stored for more than six months, the top radiator fan should be checked for proper rotation, noise or stalling before powering up.

7.1.2 Power-on Procedure

Inspect the equipment thoroughly before powering it on. The equipment can only be powered on after all the inspection items are confirmed to meet the requirements.

Prerequisite

NOTICE

Before the ESS is powered on for the first time, disconnect the red actuation cable of the aerosol fire extinguishing equipment to prevent accidental activation. The disconnection point is inside the junction box of its accessories. Reconnect the actuation cable once the FSS enters normal operation.

- The power and communication wiring of the ESS have been completed.
- The outdoor temperature is in the range of -30 ℃ to 50 ℃.

> It is not recommended to power on the equipment at temperatures below -30 °C. If the temperature is too low, it will take 24 consecutive hours or more for the system to heat the cells. During this period, the system cannot operate normally.

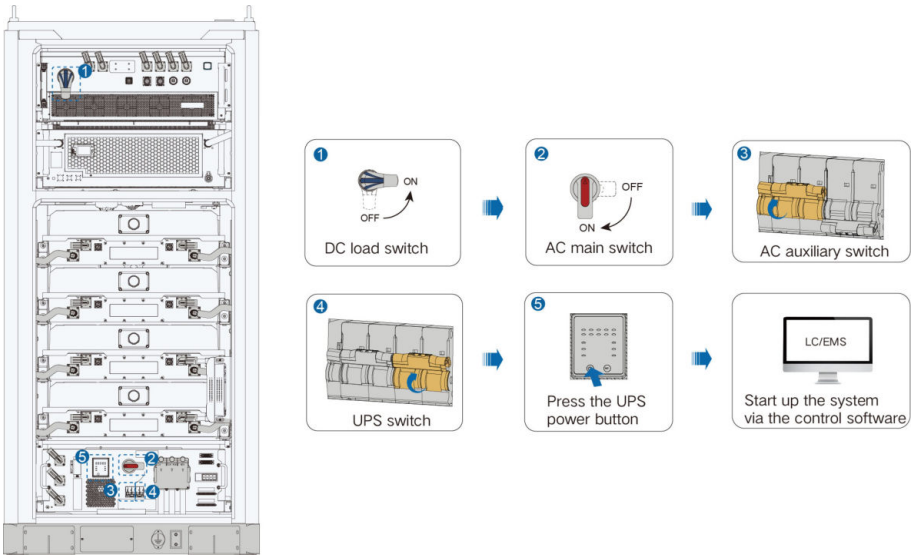

- The auxiliary power supply is used to power devices including the switch, LC, and fans.
- The liquid cooling unit may be switched on at factory. Check whether it is switched on when powering on.

7.2 Shutdown

7.2.1 Planned Shutdown

Planned shutdown refers to an interruption to the equipment operation that is scheduled in advance for overhaul, test, or maintenance.

Prerequisite

Shut down the system via the control software, and switch off the battery relay (in case of an emergency, you can press the emergency stop button on the ESS).

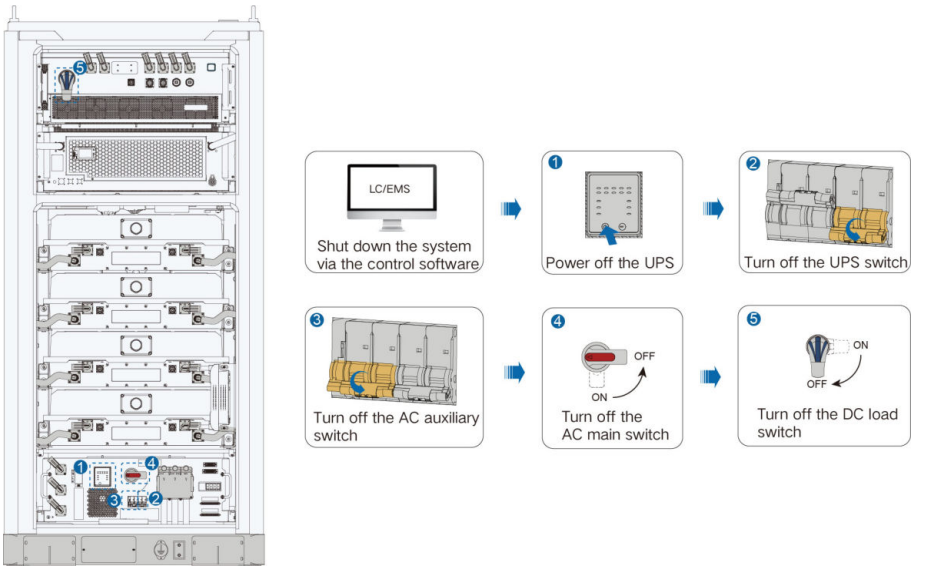

- Before working on the AC wiring terminals, be sure to turn off the upstream switches of the ESS first.

Proceed with the electricity test after the system self-discharge is completed.

7.2.2 Emergency Shutdown

Contact the local fire department in case of an emergency.

8 Fire Suppression

- The equipment has an internal automatic fire suppression system. Do not flip the fire suppression switch unless an emergency occurs.

8.1 General Rules

Always comply with the fire laws and regulations of the country/region where the project is located.

Perform regular inspection and maintenance on the fire suppression system regularly to ensure it can function properly.

NOTICE

If an operation and management personnel receives an ESS alarm or fault signal on-site, via the software, or from the plant-level FACP, while ensuring safety, request qualified firefighting personnel to conduct an on-site inspection and then manually clear the alarm or fault.

8.2 Fire Suppression System

Each ESS has a fire suppression system (FSS) that can function independently, without interfering with each other.

The FSS of the ESS includes a detection and alarm system, a fire extinguishing system, and a backup protection system (optional).

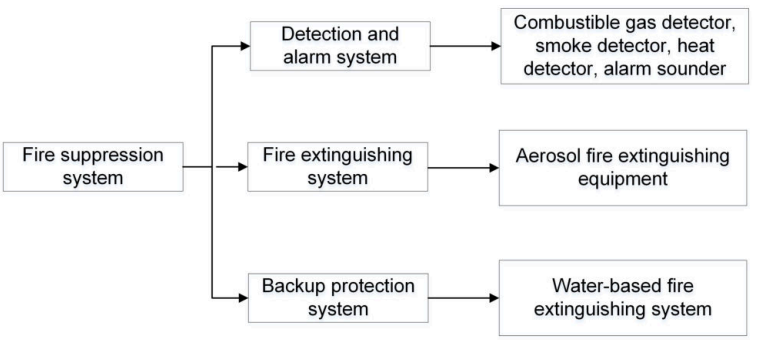

Figure 8-1 FSS Composition

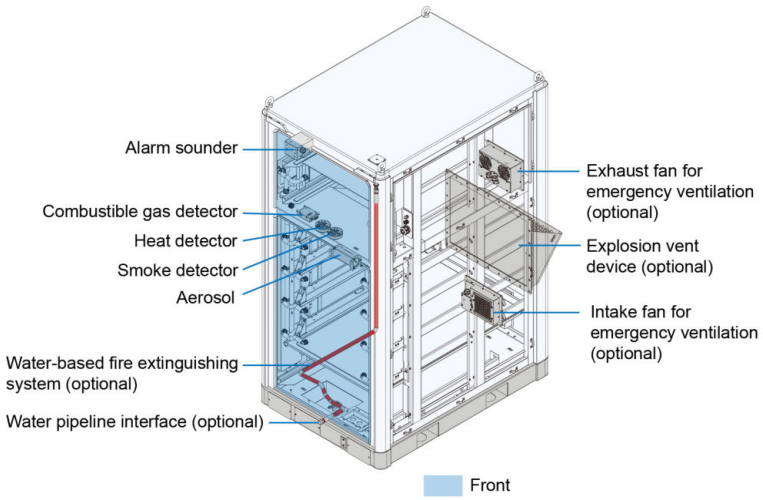

Figure 8-2 FSS Equipment

Combustible Gas Detectors Test Requirements

To ensure the detection accuracy of the combustible gas detectors, perform a bump test at least twice a year. If the detector fails the bump test, check and if necessary, calibrate the detector.

Bump Test Requirements:

- Personal protective equipment: Safety goggles (recommended).
- Test gas: 4000 ppm hydrogen with nitrogen as the balance gas.
- Gas flow: Use a pressure-reducing valve to maintain a gas flow rate of ≥ 0.5 L/min.
- Gas pipe: Vinyl (recommended); maximum outer diameter of 5/16 inches (approximately 8 mm).

8.3 Detection and Alarm System

The detection and alarm system is able to discover fires early in their development and thus helps to reduce the risk of fire to the minimum.

Each ESS is equipped with a fire detection and alarm system consisting of a combustible gas detector, a smoke detector, a heat detector, and an alarm sunder.

- The combustible gas detector can detect the concentration of combustible gases produced during thermal runaway. When the concentration of combustible gases inside the battery compartment reaches the preset alarm threshold, the detector will trigger an alarm and upload the alarm signal to the LC.
- The smoke detector assesses the smoke concentration based on the scattering of light in smoke. When the smoke concentration in the battery compartment reaches the preset threshold (0.15 dB/m), the smoke detector will trigger an alarm and upload the alarm signal to the LC.

- The heat detector senses the changes of temperature in the battery compartment. If the temperature in the battery compartment reaches the preset threshold (54 °C), the heat detector will trigger an alarm and upload the alarm signal to the LC.
- In addition, if the LC also receives a cell overtemperature fault signal, the LC will shut down the current ESS.
- When both the smoke detector and heat detector trigger an alarm, under their linkage control, the alarm sounder will trigger an acoustic alarm to alert on-site personnel to the abnormal conditions in the equipment.

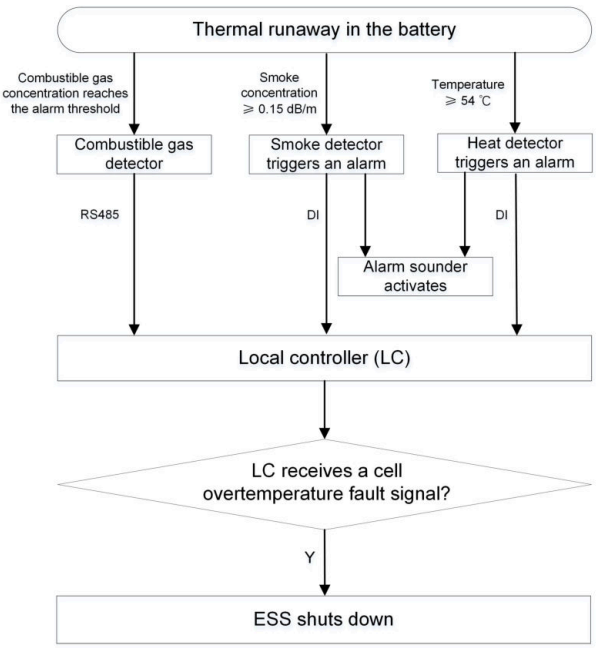

Figure 8-3 Control Logic of the Detection and Alarm System

8.4 Fire Extinguishing System

Each ESS is equipped with a condensed aerosol fire extinguishing system. Its condensed aerosol fire extinguishing equipment consists of an aerosol generator, a feedback element, and an enclosure.

When both the smoke detector and heat detector trigger an alarm, under their linkage control, the aerosol generator will be activated, releasing smoke-like fire extinguishing agent. The fire extinguishing agent will then be discharged into the battery compartment through the nozzle on the enclosure to extinguish the fire. After the fire extinguishing agent is released, the feedback element will send a fire extinguishing agent released signal to the LC. In addition, if the LC also receives a cell overtemperature fault signal, the LC will shut down the current ESS.

NOTICE

When both the smoke and heat detector trigger an alarm, triggered by the linkage control mechanism, the aerosol fire extinguishing agent will be discharged. Therefore, before conducting tests, disconnect the activation line of the aerosol fire extinguishing system to prevent accidental activation.

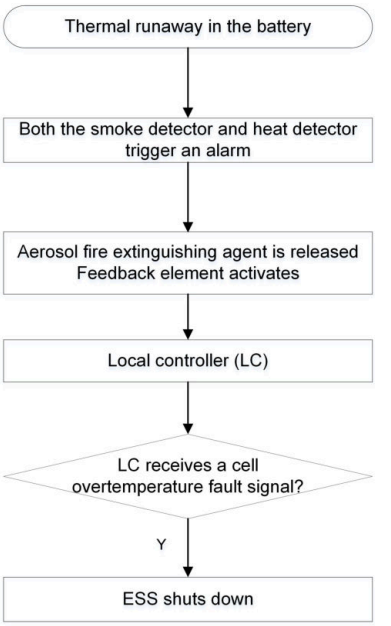

Figure 8-4 Control Logic of the Fire Extinguishing System

8.5 Backup Protection System (Optional)

In addition to the fire extinguishing system, the ESS also has a backup protection system, in case the fire keeps spreading even after the fire extinguishing system has activated.

In case the fire keeps spreading after the fire extinguishing system activates, the customer can activate the backup protection system after the ESS is powered off to extinguish the fire. The backup protection system consists of the sprinkler, water piping system, and reserved interface (pipe connector).

- When the temperature around the sprinkler reaches 93 °C, the glass bulb inside bursts, activating the sprinkler. Water then flows through the external and internal piping into the battery compartment, immersing the PACKs, to cool the equipment down and extinguish the fire.
- The reserved interface has a DN25 pipe connector. The external piping system shall be designed and installed by the customer separately and properly connected to the reserved interface on the ESS.

The external piping system can be designed according to the actual situation at the project site. Generally, there are two options: manual fire extinguishing and automatic fire extinguishing.

- Manual: Suitable for scenarios where fire trucks or other movable equipment are available at the site. In this scenario, set up a water supply piping system at the site in advance, with one side connected to the reserved pipe connector of the ESS and the other side to the fire truck or other movable equipment. In case of a fire, people need to manually let the water in to extinguish the flames.
- Automatic: Suitable for scenarios where fire water ponds are available at the site. In this scenario, the water supply piping system is connected to the reserved pipe connector of the ESS on one side and to the pond on the other side. In case of a fire, water from the pond will automatically flow into the piping system for fire extinguishing. A valve must be installed on the pipe connected to the reserved connector on the ESS. Ensure that no water is present in the pipes inside the ESS under normal operating conditions.

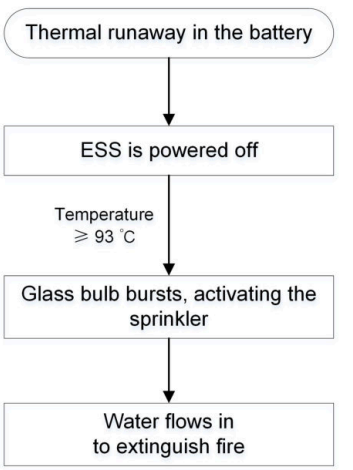

Figure 8-5 Control Logic of the Backup Protection System

9 Troubleshooting

In case of anything abnormal with the ESS, it is suggested to perform troubleshooting by referring to the troubleshooting methods mentioned in the LC300 user manual first.

For more information, refer to the below document: LC300 User Manual.

If the problem persists or there are any other questions, please contact SUNGROW. It would be helpful if you could provide the below information:

- Model and S/N of the ESS and its internal devices.
- Fault information and a brief description of the fault.
- A photo of the fault, if possible.

> If the Web user interface crashes when connecting to the LC, you need to log in again.

If switches connected hand-in-hand (cascaded) fail to communicate with each other properly, follow the troubleshooting instructions below:

1. Check that the cables are in good condition, without damage or poor contact.
2. Check the power supply.
   - Check that all switches are powered properly.
   - Check that the power indicator is in a normal state.

10 Routine Maintenance

10.1 Precautions Before Maintenance

⚠ WARNING

- **Do not open the door to maintain the device in rainy, humid or windy days. SUNGROW shall not be held liable for any damage caused by violation of the warning.**
- **Avoid opening the container door when the humidity is high in rain, snow or fog, and make sure that the seals around the container door do not curl when the door is closed.**

⚠ WARNING

- **To avoid electric shock, do not perform any other maintenance operations beyond this manual.**
- **If necessary, contact SUNGROW customer service for maintenance.**

NOTICE

In the event of heavy snowfall at the project site, please clear the snow from the top of the equipment and the surrounding area in a timely manner.

In fair weather, it is recommended to open the container door to dehumidify the equipment.

10.2 Container Maintenance

10.2.1 Appearance Repair

Check if the protective paint sprayed on the enclosure of the product fell off or peeled off. If so, repair it timely.
Spray a special protective paint to the exterior of the product every 5 years.

Solutions

Select different repair solutions based on the damage conditions.

Conditions	Solutions
Surface dirt that can be wiped off	10.2.1.1 Detergent Cleaning
Finish paint falls off, and the primer is intact	10.2.1.2 Finish Paint Repair
Primer is damaged, and the base material is exposed	10.2.1.3 Double-Layer Paint Repair

10.2.1.1 Detergent Cleaning

Prerequisite

For dust or stains on the product surface, you can wipe them off using water and alcohol.

Prepared by Users

Table 10-1 Cleaning Tools

No.	Item
1	Cleaning cloth
2	Water
3	Alcohol or other non-corrosive detergents

Step 1 Wet the cleaning cloth (or other scrubbing tools) with water, and scrub the dirty parts on the surface.

Step 2 If the dirt cannot be cleaned with water, scrub with 97% alcohol till the surface is acceptable. (Or try to use non-corrosive detergents that are generally used locally.)



--End

10.2.1.2 Finish Paint Repair

Prerequisite

For minor scratches or surface paint chalking, where the finish paint has peeled off, but the base material is not exposed, finish paint repair is needed to restore the product appearance.

Finish Paint Selection and Mixing

Table 10-2 Finish Paint Selection and Mixing

Brand and Model	Chemical Component	Mixing Ratio	Thinner	Drying Time (Minimum)
Jotun Finish Coat Hardtop XP or Hardtop XPL	Two-component chemically cured aliphatic	Main component : Hardener= 10:1 (Volume Ratio)	Jotun Thinner No.10	5℃ 24h 10℃ 12h 23℃ 5h 40℃ 3h
AkzoNobel Finish Paint Interthane 990	Two-component acrylic polyurethane paint	Main component : Hardener= 6:1 (Volume Ratio)	International GTA056	5℃ 24h 25℃ 6h 35℃ 4h

- Confirm with SUNGROW before using paints of other brands or models.
- When using a two-component paint, first thoroughly agitate each component individually, and then mix them in the specified proportions for stirring.
- Add the thinner only after the paint and hardener have been mixed.
- Do not use paint that has exceeded its shelf life.

Prepared by Users

Table 10-3 Cleaning Tools

No.	Item
1	400 mesh/600 abrasive paper
2	Cleaning cloth
3	Alcohol
4	Brush
5	Finish paint
6	Film thickness meter

Environment Requirements

- Ambient temperature: 5℃–40℃
- Base material temperature: 5℃–60℃
- Relative humidity: 10%–85%RH

Repair Steps

Step 1 Polish the paint surface with blistering or scratches with an abrasive paper to expose the gray primer. Use a film thickness meter to measure the primer thickness, which must be at least 150μm.

Step 2 Use a clean brush to remove any residue from the surface.

Step 3 Use a piece of clean cloth dipped in alcohol or detergent to remove the surface powder.

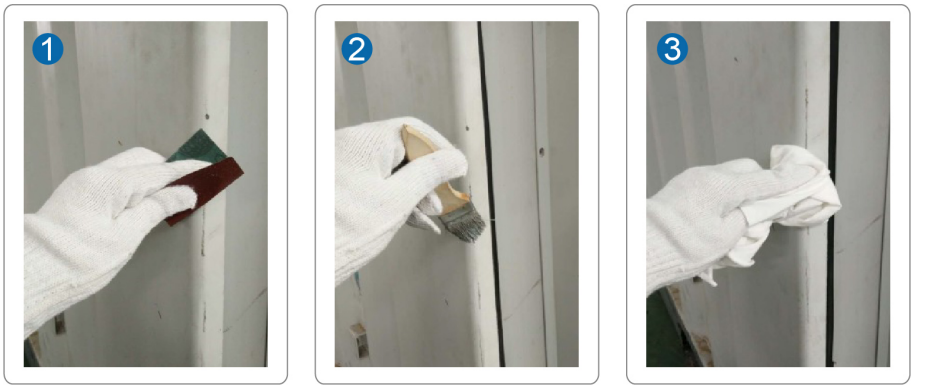

Step 4 Repair the finish paint.

a. Prepare the finish paint with the same color as the appearance.

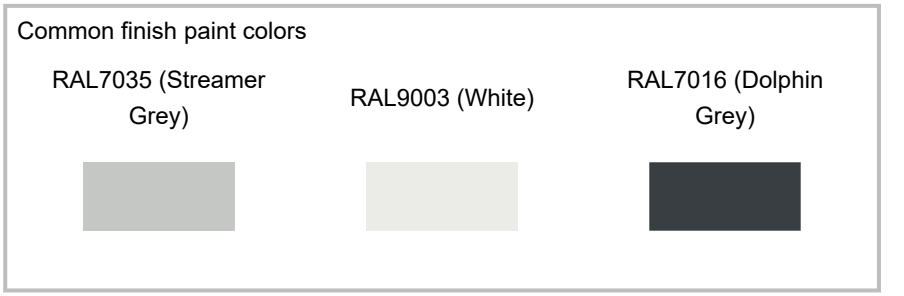

b. Mix the finish paint according to the paint model and the requirements of Table 10-2 Finish Paint Selection and Mixing.

c. Apply the finish paint using a brush in a crosshatch pattern. Once the paint fully dried, measure the film thickness using a film thickness meter. Ensure that the single coat thickness falls between 50μm–100μm.



d. When applying multiple layers of paint, wait for each layer to dry completely before applying the next. The total thickness of the primer and finish paint must be at least 240μm.

Step 5 Inspect the paint to ensure it has a uniform color, smooth transitions, and meets the required film thickness.

--End

10.2.1.3 Double-Layer Paint Repair

Prerequisite

If the rusted area is large, or there are deep scratches or dents that expose the base material, perform a double-layer paint repair, including both a primer and a finish paint.

Primer and Finish Paint Selection and Mixing

Table 10-4 Primer and Finish Paint Selection and Mixing

Brand and model	Chemical Component	Mixing Ratio	Thinner	Drying Time (Minimum)
Jotun Primer Jotamastic 90	Two-component epoxy paint	Main component : Hardener= 3.5:1 (Volume Ratio)	Jotun Thinner No.17	5℃ 30h 10℃ 10h 23℃ 3h 40℃ 1.5h
AkzoNobel Primer Interseal 670HS	Two-component epoxy paint	Main component : Hardener= 5.67:1 (Volume Ratio)	International GTA220	5℃ 36h 10℃ 16h 25℃ 10h 40℃ 4h
Jotun Finish Coat	Two-component chemically cured aliphatic	Main component : Hardener= 10:1 (Volume Ratio)	Jotun Thinner No.10	5℃ 24h 10℃ 12h 23℃ 5h 40℃ 3h

Brand and model	Chemical Component	Mixing Ratio	Thinner	Drying Time (Minimum)
Hardtop XP or Hardtop XPL				
AkzoNobel Finish Paint Interthane 990	Two-component acrylic polyurethane paint	Main component : Hardener= 6:1 (Volume Ratio)	International GTA056	5℃ 24h 25℃ 6h 35℃ 4h

- Use primers and finish paints from the same manufacturer.
- Confirm with SUNGROW before using any paint from a different manufacturer.

- When using a two-component paint, first thoroughly agitate each component individually, and then mix them in the specified proportions for stirring.
- Add the thinner only after the paint and hardener have been mixed.
- Do not use paint that has exceeded its shelf life.

Prepared by users

Table 10-5 Cleaning Tools

No.	Item
1	400 mesh/600 mesh abrasive paper
2	Cleaning cloth
3	Alcohol
4	Brushes with different sizes
5	Grinder (conical and cylindrical polishing heads)
6	Wall putty
7	Finish coat
8	Primer
9	Film thickness meter

Environment Requirements

- Ambient temperature: 5℃–40℃
- Base material temperature: 5℃–60℃
- Relative humidity: 10%RH–85%RH

Repair Steps

Step 1 Use a grinder or abrasive paper to smooth uneven areas on the surface, achieving a smooth finish with a metallic luster. Ensure a uniform transition from rusted areas to intact coating.

> Uneven areas refer to burrs, metal fragments, slag, gaps, and sharp edges on the product.

Step 2 For deeper defects such as scratches or dents, repair them with wall putty to ensure a flat surface.

Step 3 Use a clean brush to remove any residue from the surface.

Step 4 Use a piece of clean cloth dipped in alcohol to remove the surface powder.

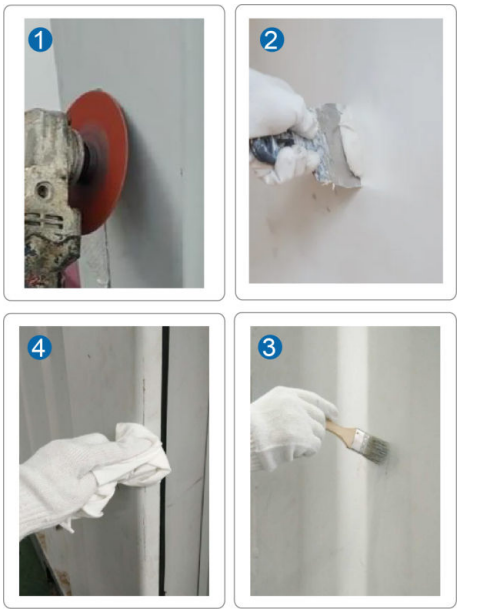

Step 5 Repair the primer.

a. Prepare the primer with the same color as the appearance.

Common finish paint colors

RAL7035 (Streamer Grey)	RAL9003 (White)	RAL7016 (Dolphin Grey)

b. Mix the primer according to the paint model and the requirements of Table 10-4 Primer and Finish Paint Selection and Mixing.

c. Apply a primer with a small brush, and use a film thickness meter to ensure the coating thickness in corners and gaps is between 70μm–80μm.

d. After the first layer dries, apply another layer of primer using a brush in a crosshatch pattern. Once it is dry, check that the dry film thickness is within 100μm–300μm.

Step 6 Refer to 10.2.1.2 Finish Paint Repair for finish paint repair.

Step 7 Inspect the paint to ensure it has a uniform color, smooth transitions, and meets the required film thickness.

--End

When using spray paint, follow these steps:

1. Carefully cover the area outside the damaged spot (extending 800mm outward) using masking paper.
2. Spray the exposed area with the paint. After the paint dries, check that the dry film thickness is within the range of 100μm–300μm.

10.2.2 Checking Door Locks and Hinges

Check whether the door locks and hinges of the container can be used normally after cleaning. Lubricate the door lock holes and hinges properly when necessary.

10.2.3 Checking Sealing Strips

If the sealing strip is in good condition, it can effectively prevent water seepage inside the container. Therefore, carefully check the sealing strip and replace it immediately if there is any damage.

10.3 Battery Use Safety and Maintenance

This product is equipped with UPS batteries. Pay attention to battery use safety and maintenance during product operation and storage.

10.3.1 Safety Precautions

⚠ WARNING

Strictly perform the following steps before installing or maintaining battery-powered equipment. Failure to comply may result in equipment damage, electric shock, and other safety hazards!

- **Ensure the equipment is fully powered off and completely disconnected from grid power and batteries. Live working is strictly prohibited.**
- **After disconnection, wait for at least 5 min to fully discharge capacitors before subsequent installation or maintenance, to eliminate risks caused by residual electric charge.**

⚠ WARNING

Strictly adhere to the following standards and requirements when installing or commissioning batteries:

- **Do not install batteries until the system is fully ready for power-on. Ensure that the system is ready before battery installation.**
- **After battery installation, energize the UPS within 72 h to prevent battery drain and extend battery service life.**
- **If the batteries have been stored for a long time, measure their appearance, open-circuit voltage, and internal resistance after commissioning when their SOC reaches 100%. If the results fail to meet specification limits, do not use the batteries, and replace them promptly.**
- **The expected service life of the UPS and batteries is one year. High ambient temperature can cause capacity degradation, overheating, bulging, leakage, and other defects that shorten battery service life. Evaluate the actual replacement cycle based on on-site project environmental conditions.**
- **(Optional for FSS) When the main power of the FACP / FSS power supply is disconnected and no fire occurs, power off the standby battery to avoid undervoltage damage to the battery.**

⚠ WARNING

Check UPS status before energizing the ESS!

- **Do not energize the system unless the UPS is confirmed to start up normally, to have sufficient battery charge, and to provide normal output.**
- **Do not energize the equipment with high voltage when the UPS that serves as the power supply for the protective relays is de-energized, not yet commissioned, or in a fault condition. Failure to comply may result in severe safety incidents.**

⚠ WARNING

Strictly adhere to the battery recharging standards and requirements!

- **(Optional for FSS) FSS batteries: Complete recharge within 24 h if the batteries are fully discharged after grid power disconnection.**
- **UPS batteries: Complete recharge within 7 days if the batteries are fully discharged after grid power disconnection.**
- **Disable the power backup function after grid power disconnection to avoid complete battery discharge.**

⚠ WARNING

Strictly adhere to the storage and transportation requirements!

- **Store batteries at full SOC. Storage when undercharged is forbidden. Failure to do so will result in irreversible damage to the batteries.**
- **High temperature or poor ventilation during storage and transportation accelerates battery self-discharge. Therefore, the batteries must be kept in well-ventilated conditions and kept away from open flames, sparks, heat sources, organic solvents, and other hazards.**
- **Batteries lose partial capacity via self-discharge during storage or transportation. Perform recharging before use.**
- **Conduct regular recharging of batteries during storage according to specified procedures. For detailed operation, refer to #unique_91.**
- **If storage duration exceeds six months, conduct a comprehensive functional inspection and test on the UPS and batteries before commissioning. Commissioning is permitted only after passing all tests.**
- **Battery storage environment requirements: The temperature range is -20°C to +40°C. (The recommended storage temperature range is -20°C to +25°C.) The relative humidity is 0% to 95%, non-condensing. Do not store the batteries in environments that do not meet the requirements.**

The following conditions void the product warranty for the UPS and batteries:

- Battery damage caused by human factors.
- Alteration of the serial number or loss of the anti-counterfeit label.
- Battery damage or loss arising from force majeure events.
- Operation outside the service conditions specified in this manual, or failure to comply with all prohibitions and precautions herein.
- Usage beyond product specifications, such as operation at high ambient temperatures, frequent charge-discharge cycles (more than 4.5 cycles per month on average), and low-current overdischarging.

10.3.2 Battery Preventive Maintenance

The battery service life is affected by ambient temperature and depth of discharge. Accordingly:

- Operate the batteries within the temperature range specified in the product specifications whenever possible.
- Perform regular inspections (e.g., once per year) covering appearance, open-circuit voltage, and internal resistance of the batteries. The internal resistance of batteries will change after commissioning. A battery is deemed qualified if its internal resistance is less than 2.5 times the value specified in the *Battery Specifications*.
- Recharge batteries promptly after deep discharge.
- When the on-site ambient temperature is high, maintain a certain quantity of spare batteries on-site for emergency use.
- For large-capacity batteries, replace individual faulty cells rather than replacing the entire string.

Table 10-6 List of Tools

No.	Item
1	Battery tester
2	Multimeter

Battery Inspection Procedure:

- Connect the probe of the tester or multimeter to the positive and negative terminals of the battery, and ensure secure contact.
- Read and record the battery voltage displayed on the test device.
- Compare the measured voltage with the specification parameters of the corresponding model to check whether the voltage is within the normal range. Replace the battery if it is not within the range.

10.3.3 Battery Replacement and Maintenance

It is recommended to replace all batteries found with leakage on site.

- Before replacing batteries, shut down the equipment and cut off its power supply to ensure that the equipment is completely de-energized during the operation.
- Wear insulated gloves throughout the entire operation.
- Battery electrolyte is concentrated sulfuric acid with strong corrosivity. Do not touch it with bare hands. If leakage occurs during battery replacement or maintenance, wear rubber gloves to prevent acid contact with skin.

No.	Item
1	Insulated gloves / corrosion-resistant insulated gloves
2	Multimeter
3	Wrench

Step 1 Power off the system, and turn off the battery power supply switch.

Step 2 Turn off the UPS power supply switch, then press and hold the shutdown button on the UPS panel to shut down the UPS.

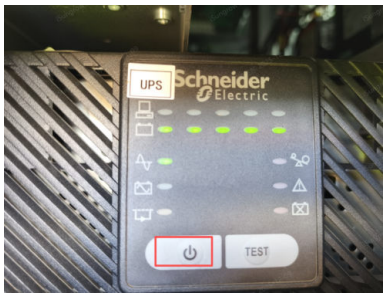

Figure 10-1 UPS Panel

Step 3 Remove interconnection cables between batteries one by one, and keep them properly stored.

Step 4 Take out the batteries to be replaced, and install new batteries. Reconnect the previously removed cables according to the wiring diagram.

After wiring, inspect the battery connections for tightness and correctness:

- Check that all screws are properly tightened and that there are no stripped or misaligned threads.
- Check that all components are properly installed and that there are no incorrect installations or missing parts.

⚠ CAUTION

Before installation, inspect new batteries for bulging or leakage, and measure their open-circuit voltage to ensure it is no less than 12.9 V.

Step 5 Start up the UPS, and close its internal output circuit breaker. Confirm the voltage across UPS output terminals is 230 V, and then close the UPS power supply switch.

--End

10.3.4 Maintenance for Long-Term Stored Batteries

For long-term stored batteries, perform discharge before charging to prevent uneven charging or local overheating, which would shorten battery service life.

Table 10-7 List of Tools

No.	Item
1	Battery tester
2	Multimeter
3	On-site charging device*

*Since the UPS cannot perform long-duration equalized charging, other on-site charging devices shall be used for charging based on the actual conditions.

Table 10-8 Recharging Method

Storage Temperature	Recharging Interval	Recharging Procedure
25°C	Once every 6 months	Charge and discharge the batteries via the UPS (pay attention to load heat dissipation). Connect the specified number of 12 V / 100 Ah batteries in series according to product requirements, then connect them to the UPS via a 63 A / 2P air circuit breaker, and connect to a resistive load (resistor bar or light bulb) of the corresponding power rating ($W = \frac{PL}{N \cdot 6 \cdot \eta}$*) for constant-power discharge for 4 h. After discharging is complete, recharge the batteries. A charging duration of 16 h or more is recommended. After charging is complete, measure the battery voltage to confirm it is above 13.2 V.
30°C	Once every 4 months	
35°C	Once every 3 months	
40°C	Once every 2 months	

*PL: active power of UPS rated output.N: number of batteries.η: efficiency of Battery Energy Storage System Container.

⚠ WARNING

To meet charging requirements and extend battery service life, the max. storage duration of batteries shall not exceed 6 months. If the UPS needs to be stored with power disconnected for a long time, a 24-hour recharge must be performed on the batteries at least once a month to prevent irreversible performance degradation.

⚠ CAUTION

Excessively high discharge current may lead to overcurrent hazards.

Measure the internal resistance and voltage of batteries after recharging. For detailed operation, refer to 10.3.2 Battery Preventive Maintenance.

10.4 Battery Maintenance

10.4.1 Maintenance Precautions

For safe and effective maintenance of the system, maintenance personnel must carefully read and observe the following safety requirements.

1. Maintenance personnel must hold an electrician's license issued by the local safety supervision authority and successfully complete professional training before operation.
2. Observe related safety precautions, use necessary tools, and wear personal protective equipment.
3. Do not wear jewelry or metal accessories such as watches.
4. Do not touch the positive and negative high-voltage terminals of the ESS with hands at the same time.
5. Turn off all HV and LV switches before maintaining the ESS.
6. Do not clean the ESS with water directly. Use a vacuum cleaner if necessary.
7. Connect and disconnect cables by following the standard operation procedure. Do not connect or disconnect any cables forcefully or brutally.
8. Put away the tools and materials in time after maintenance. Check that no metal objects are left inside or on top of the equipment.
9. If there is any question about the operation and maintenance of the equipment, please contact SUNGROW Customer Service. Unauthorized operation is prohibited.

10.4.2 Maintenance

1. PACK operating temperature: The working temperature should be kept between -30℃–50℃.
2. The RACK should not be charged or discharged with high magnifying power. The continuous charging and discharging current of a single rack should not exceed the rated current.
3. When the energy storage system is not used in a long time, it should be charged once every six months, until its SOC is 30%–40%.
4. When the system is used after long-term storage, it should be fully charged at least once to restore the best performance of the battery.
5. To perform maintenance on the PACK on the top layer, first remove the nearby smoke detector, heat detector, and any other components that may hinder smooth removal of the PACK. Ensure that no components are damaged during the removal process.
6. Regularly check whether the air duct of the cooling system is blocked and clean the system. In particular, clean the air inlet and outlet of the fan and use a vacuum cleaner

if necessary, to maintain free air circulation inside the cabinet. Before dust removal, the power supply must be cut off. It is forbidden to rinse the system with water.

7. Regularly check whether the fastening bolts of the high-voltage cables and connecting busbars of the energy storage system are loose, whether the contacts are in good conditions, and whether the terminal surfaces are severely corroded or oxidized.
8. Regularly check the protective covers of high-voltage positive and negative electrodes of the PACK for ageing, damage and missing.
9. Regularly check cables for loosening, ageing, damage and fracture and inspect whether the insulation is in good conditions.
10. Regularly check the battery container for pungent odor and high-voltage connections for burning odor.
11. Regularly check whether the voltage, temperature and other data of the monitoring upper computer are correct and whether there are fault alarms in the alarm column.
12. Regularly check whether the status and alarm indicators of the energy storage system are in good conditions and whether they work properly.
13. Regularly check whether the emergency stop button of the energy storage system can be used, in order to quickly shut down the system in an emergency.
14. Regularly check whether the fire extinguishers are in good conditions and within the validity period.
15. Never use different types of battery modules in series or parallel.
16. PACK A and PACK B are prohibited from replacing each other.

⚠ WARNING

- **The battery is potentially dangerous, so appropriate protective measures must be taken during operation and maintenance!**
- **Incorrect operation may cause severe personal injury and property damage!**
- **Use the appropriate tools and protective equipment during battery operation.**
- **Battery maintenance must be performed by those who have battery expertise and received safety training.**

10.5 Coolant Replacement

Object	Standard	Period	Tools
Coolant	1. There are obvious impurities in antifreeze; 2. Antifreeze is significantly darker in color.	5–6 years	Water pump, hose, hose clamp, slotted screwdriver Note: Please contact Sungrow Customer Service to replace hardware facilities

⚠ WARNING

Normally coolant is not a health hazard, excessive exposure may cause irritation to the eyes, skin and breathing.

NOTICE

- **The coolant in the refill tank must not exceed the "H" line.**
- **The brand of coolant to be replaced is limited to Great Wall and Acwell, and it is recommended to use the same brand of coolant. If you choose to mix Great Wall and Acwell coolants, the mixing ratio of different coolants is limited to 9:1.**

Personal protection

Wear personal protective equipment (PPE) when changing coolant. PPE should comply with relevant national standards, including but not limited to the following protective equipment.

Protective parts	Protective equipment
Respiratory protection	Under normal conditions of use, it is generally not necessary to wear respiratory protection equipment. If the engineering control facility does not maintain the air concentration at a level sufficient to protect the health of personnel, choose respiratory protection equipment suitable for the conditions of use and in compliance with relevant legal requirements. If you need to wear a safety filter mask, please choose a suitable mask and filter combination. Choose a filter suitable for a mixture of particulate/organic gas and vapor [boiling point >65 ℃ (149 ℉)].
Hands protection	Use oil-resistant, chemical-resistant protective gloves.
Eyes protection	Please use protective goggles.
Skin and body protection	Use non-permeable protective clothing and safety shoes.

Disposal considerations

Waste types	Disposal measures
Coolant	Discharges are made in accordance with local regulations and are not disposed of haphazardly.
Rubbish remnant	Separate and recycle, and if it meets the relevant regulations, it can be burned or reused.

Waste types	Disposal measures
Containers	Dispose of in accordance with all applicable local and national regulations. Use recovery/recycling where feasible, otherwise incineration is the recommended method of disposal. Empty containers may contain hazardous residues. Do not cut, puncture or weld on or near to the container. Labels should not be removed from containers until they have been cleaned. Contaminated containers must not be treated as household waste. Containers should be cleaned by appropriate methods and then re-used or disposed of by landfill or incineration as appropriate. Do not incinerate closed containers.

Accidental release measures

When a coolant leak occurs, refer to the following measures to deal with it.

- Immediately contact a professional to have uninvolved persons evacuated quickly to safety.
- Cut off the source of the spill as far as possible and prevent it from entering spaces such as sewers, drains and bodies of water.
- When cleaning up spilled liquids, wear protective equipment to protect your body from contact with the spilled or released material.
- Use sand, mud or other materials that can be used as barriers to set up barriers to prevent diffusion. Recover liquid directly or store in absorbent. Clean the contaminated area with detergent, water and a hard broom. Put the collected liquid in a disposable container.

First aid measures

Contact method	Measures
Inhalation	Move to fresh air. If breathing has stopped, give artificial respiration first aid. Seek medical attention.
Skin contact	Take off contaminated clothing. Rinse the skin thoroughly with soap and water. Seek medical attention if skin inflammation or rash occurs.
Eyes contact	Flush eyes with plenty of water for at least 15 minutes. Seek medical attention.
Ingestion	If ingested, but conscious, water or milk to drink and actively seek medical help, do not induce vomiting unless instructed by healthcare patients. If you cannot get help from a doctor, please send the patient and the container and label to the nearest medical

Contact method	Measures
	emergency center or hospital. Do not give any food to unconscious patients.

10.6 Post-maintenance Inspection

After maintenance work is completed, perform the following checks:

- Do not leave screws, washers, or other metal parts inside the cabinet during maintenance. Otherwise, the equipment may be damaged.
- Make sure all screws are tightened in place.
- In most cases, the protective covers inside the equipment need to be removed before the maintenance work. After completing the maintenance work, mount back all protective covers in their original positions, and make sure the screws are all tightened properly.
- To prevent collisions between the door lock tab and the door frame hinge, ensure that the angle between the door handle and the vertical direction is at least 100° when locking the door.
- Ensure the seal strip around the door does not curl when the door is closed.

11 Appendix

11.1 System Parameters

Product Model	ST255CS-2H
Battery Data	
Cell type	LFP
System battery configuration	256S1P
Rated battery capacity	257 kWh
Battery voltage range	691.2 V – 934.4 V
Depth of charge/discharge	0% – 100%
DC/AC Power Converter Unit Data (Grid-connected)	
Rated power	125 kW
Rated grid voltage	400 V
Grid voltage range	340 V – 440 V
Rated grid frequency	50 Hz / 60 Hz
Grid frequency range	45 Hz – 55 Hz / 55 Hz – 65 Hz
Current THD	≤ 3% (at rated power)
Current DC component	≤ 0.5% (at rated power)
DC/AC Power Converter Unit Data (Off-grid)	
Rated AC voltage	400 V
Rated AC frequency	50 Hz / 60 Hz
Unbalanced load capacity	100%
System Data	

Product Model	ST255CS-2H
*Dimensions (width * height * depth)	1150 * 2450 * 1610 mm
*Weight	≤ 2900 kg
IP rating (battery compartment)	IP55
Auxiliary power supply	Internal auxiliary power supply (standard) / external auxiliary power supply (optional)
Corrosion protection class	C5
Ambient humidity	0% – 100%
Ambient temperature	-30 ℃ to 50 ℃ (derate at > 45 ℃)
Max. altitude	3000 m
Cooling method	Smart liquid cooling
Fire suppression system	Combustible gas detector, smoke detector, heat detector, alarm sounder, hot aerosol fire extinguishing equipment, water-based fire extinguishing system (optional), emergency ventilation system (optional), explosion vent panel (optional)
Communication interface	Ethernet
Communication protocol	Modbus TCP
Compliance	IEC 62619, IEC 63056, IEC 62040, IEC 62477, IEC 61000, IEC 62933, UN 38.3

*The technical data is for reference only, please refer to the information on the nameplate of the product.

11.2 Abbreviations

Abbreviation	Definition
B	
BM	Battery Module (PACK)
BC	Battery Cluster (RACK)
BMU	Battery Management Unit

Abbreviation	Definition
BCMU (CMU)	Battery Cluster Management Unit (CMU for short)
BSMU (SMU)	Battery System Management Unit (SMU for short)
BMS	Battery Management System
BSC	Battery System Controller
BCP	Battery Collection Panel. Battery DC inputs are combined into the BCP's DC copper bar, and then connected to the DC/AC power converter unit's DC side through the copper bar on the other side of the BCP.
BSP	Battery Supply Panel. It is used as an auxiliary power supply for components inside the battery, such as lighting, FSS, etc.
D	
DC/DC	DC/DC Converter
E	
ESS	Energy Storage System
EMS	Energy Management System
F	
FSS	Fire Suppression System
FACP	Fire Host Alarm Control Panel
L	
LC	Local Controller
S	
SCADA	Supervisory Control and Data Acquisition
S/G	Switch Gear
SOC	State Of Charge
SOH	State Of Health

11.3 Tightening Torques

To avoid poor contact caused by the loosening of copper cable lugs due to stress, and to prevent heat or even fire due to increased contact resistance, make sure to tighten the screws on the cable lugs at the recommended torques:

Bolt	Torque(N·m)	Bolt	Torque(N·m)
M3	0.7–1	M8	18–23
M4	1.8–2.4	M10	34–40
M5	4–4.8	M12	60–70
M6	7–8	M16	119–140

*Torque values listed in the table are intended for the bolt and nut assembly, and do not apply to riveted nuts or riveted screws, etc. The torque to be adopted should depend on the actual situation.

**Secure the cable at a proper point to reduce the stress on the cable lug.

11.4 Quality Assurance

When product faults occur during the warranty period, SUNGROW will provide free service or replace the product with a new one.

The software security update period for this product aligns with the warranty period. During the warranty, security patches or updates will be provided if any vulnerabilities or compatibility issues are identified.

Evidence

During the warranty period, the customer shall provide the product purchase invoice and date. In addition, the trademark on the product shall be undamaged and legible. Otherwise, SUNGROW has the right to refuse to honor the quality guarantee.

Conditions

- After replacement, unqualified products shall be processed by SUNGROW.
- The customer shall give SUNGROW a reasonable period to repair the faulty device.

Exclusion of Liability

In the following circumstances, SUNGROW has the right to refuse to honor the quality guarantee:

- The free warranty period for the whole machine/components has expired.
- The device is damaged during transport.
- The device is incorrectly installed, refitted, or used.

- The device operates in harsh conditions beyond those described in this manual.
- The fault or damage is caused by installation, repairs, modification, or disassembly performed by a service provider or personnel not from SUNGROW.
- The fault or damage is caused by the use of non-standard or non-SUNGROW components or software.
- The installation and use range are beyond stipulations of relevant international standards.
- The damage is caused by unexpected natural factors.

For faulty products in any of above cases, if the customer requests maintenance, paid maintenance service may be provided based on the judgment of SUNGROW.

> Product data such as product dimensions are subject to change without prior notice. The latest documentation from SUNGROW should take precedence in case of any deviation.

11.5 Contact Information

In case of questions about this product, please contact us. We need the following information to provide you the best assistance:

- Model of the device
- Serial number of the device
- Fault code/name
- Brief description of the problem

For detailed contact information, please visit: **https://en.SUNGROWpower.com/contactUS**

Sungrow Power Supply Co., Ltd.

www.sungrowpower.com

MOD2063

EULEKTRO

Fragen zu diesem Produkt?

Wir beraten Sie zu Auswahl und Planung und kümmern uns um Lieferung, Inbetriebnahme und Betrieb – aus einer Hand, deutschlandweit.

TELEFON	**+49 421 17512890**
KONTAKT	**eulektro.de/kontakt**
PRODUKT	**eulektro.de/produkte/sungrow-powerstack-st255cs-2h**

Eulektro GmbH · Werderstraße 69 · 28199 Bremen · Amtsgericht Bremen, HRB 36822 HB · USt-IdNr. DE343815692
Technische Änderungen und Irrtümer vorbehalten. Stand der Begleitseiten: November 2026.